EXTRACTION SYSTEMS SOLUTIONS FOR CORROSIVE AIR AND GAS

SEAT VENTILATION

$$\frac{a+b}{a} = \frac{a}{b} = 1.618$$

- RELIABILITY
- SECURITY
- DURABILITY
- HIGH PERFORMANCE

A complete range of exhaust fans for the laboratory and industry

www.seat-ventilation.com

WHO WE ARE

"An experienced team attentive to the needs of our clients around the world."

Since 1968, SEAT Ventilation has consistently prioritized safety, quality and innovation. Presently, we have emerged as the global frontrunner in providing extraction system solutions for corrosive air and gas. Our products have gained widespread recognition for their reliability, capabilities, exceptional design, and distinctive features.

Seat Ventilation meets the challenges of all-sizes and all-sectors customers, from large multinationals to medium-sized and small companies, such as installers, retailers, laboratory furniture manufacturers and end-users.

The success of our company hinges on three fundamental principles that guide our actions and decisions on a daily basis:

- **Mission:** with a unique design and reliable, high-performance materials, we offer durable solutions for extracting corrosive gases or air. Our primary focus is to ensure the safety of operators and people.
- **Vision:** our vocation is to be the most innovative group in the field of corrosive gas extraction solutions, ensuring the safety of users.

  Always delight the customer with the best quality, the best product, unparalleled service and competitive prices. Our goal is to establish a global presence, when and how customers want us to be.

  Also, we are firmly committed to an eco-responsible approach, ensuring the reuse and recycling of our products at the end of their life cycle.
- **Values:** every day, we embrace a culture of learning from our experiences to offer the best answers to our valued customers with:
  - **Responsiveness:** we prioritize establishing and nurturing close relationship with our customers, actively listening to their needs. We provide a top-quality service, ensuring that the majority of our products leaves the factory within 24 to 48 hours.
  - **Competitiveness:** by leveraging French manufacturing, we optimize our products to reduce costs and enhance delivery speed. Our team of ventilation specialists can assist you to choose the equipment best suited to your requirements and budget.
  - **Innovation:** we are continuously improving our products and developing new equipment to meet the evolving demands of our customers and the global market.
  - **Technicity:** our commitment to producing high-quality and durable products.

CONTENTS

05/07 MARKET APPLICATIONS
ENGINEERING SUPPORT
RESEARCH AND DEVELOPMENT / INVENTORY


08/21 SEAT SERIES PRODUCTS


22/33 STORM SERIES PRODUCTS


34/41 JET SERIES PRODUCTS


42/44 MOUNTING OPTIONS


45 FREQUENCY INVERTERS


46/48 ACCESSORIES


49 ECOGLASS AIR FLOW CONTROLLERS


50/51 OUR APPLICATIONS IN PHOTOS

CUSTOMER SERVICE Phone: 33 (0)5 61 69 84 43 / e-mail: info@seat-ventilation.com
Address: 70 Impasse Jean Mermoz / Parc Technologique Delta Sud / 09340 Verniolle / FRANCE

HIGH QUALITY
PRODUCTS

SEAT Ventilation extraction systems, constructed from high-performance polypropylene, are specifically designed to excel in corrosive or toxic environments.

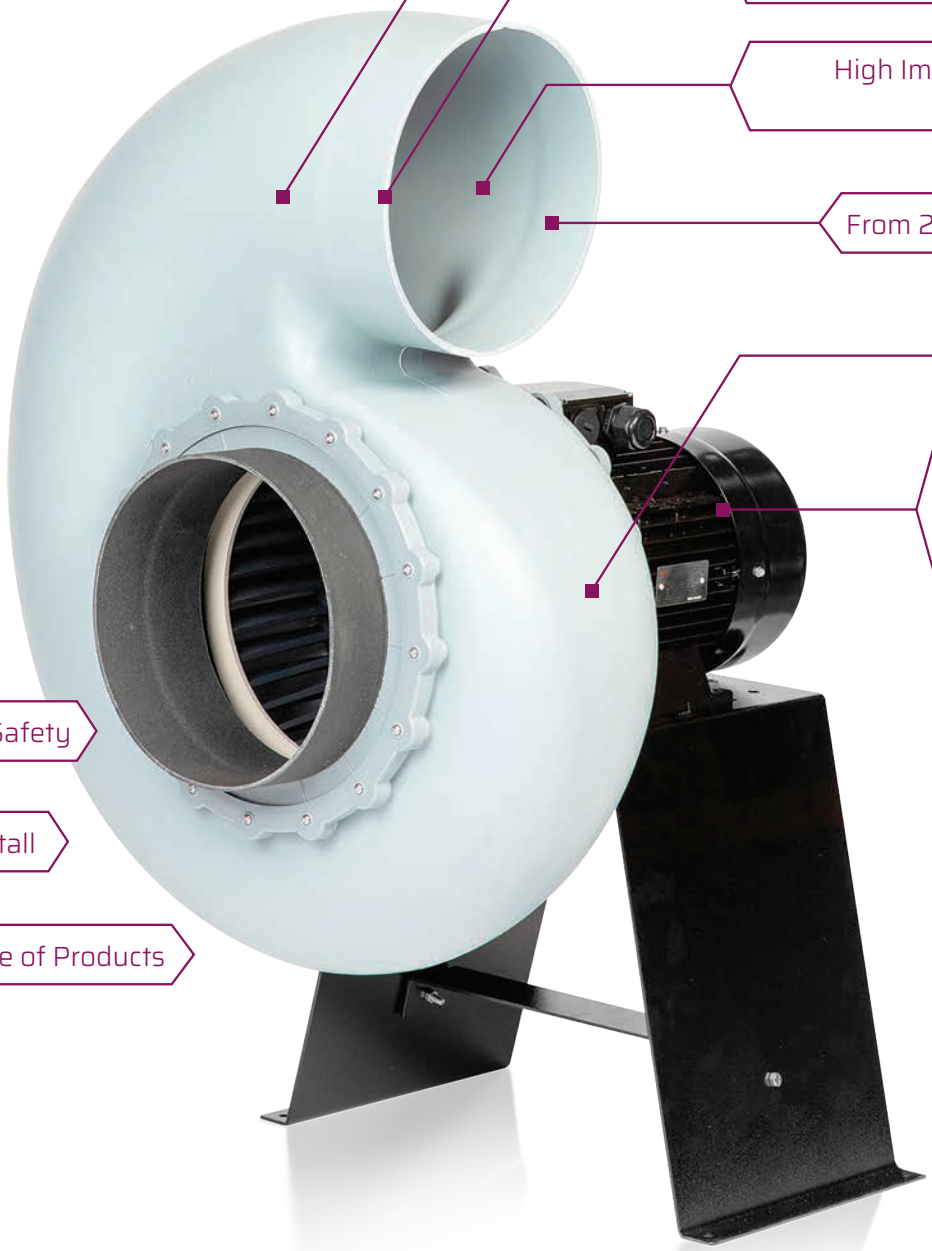

- UV Resistant & Recyclable Material
- Highly Resistant to Corrosion & Hazardous Fumes
- High Impact Heavy-Duty Polypropylene
- From 25 to 15 000 CMH
- T° Max 60°C
- Single-Phase, Three-Phase or EC Motors
- Increased Safety
- Easy to Install
- Wide Range of Products

Our fans are certified by AMCA and CETIAT

MARKET
APPLICATIONS

THE MARKETS

OIL & GAS INDUSTRY

Oil Refinery & Extraction Systems,
Exploration / Upstream /
Midstream Facilities,
Natural Gas Compressor Stations,
LNG re-gasification Plants,
Treatment Systems,
Water Process Treatments,
Drying and Dehydration,
Exhaust System for Offshore Platforms.

PHARMACEUTICAL AND CHEMICAL INDUSTRIES

Medical Facilities, Research Testing & Manufacturing Processes, Fluidized Systems.

LABORATORY FUME HOODS AND DUCTLESS FUME HOODS

Science and Technology, Biotechnology, Pancreatic Research Centers, Medicine & Biomedical Sciences, (BSL-1~4), Cancer / Research, Beam Therapeutics, Toxicology, Forensic Science.

SWIMMING POOLS, WATER PARKS, MUNICIPAL AQUATIC FACILITIES

Chemical / Chlorine Storage Rooms,
Surge Tank Systems,
Enclosed Tube Water Slide Ventilation,
Underground Equipment /
Chemical Vaults, Fitness Facilities.

WATER TREATMENT, WASTEWATER, INDUSTRIAL SCRUBBER INDUSTRY

Water Treatment Plants,
Reclamation Plants,
Wastewater Treatment,
Flue Gas/Water Treatment Systems,
Aeration Applications, Sludge Treatment and by-Product Drying, Pickling,
Sewer and Water Tunnels,
Wastewater Pumping Stations.

CHEMICAL PRODUCT STORAGE

Hazardous Materials Storage Buildings,
Chemical Mixing
and Dispensing Buildings,
Chemical Containment Rooms,
Paint Storage Room,
Spray Booth Exhaust,
Chemical Reagent Tanks,
Chemical Cabinets,
Portable Equipment/Storage Cabinet.

UNIVERSITIES, INSTITUTES, SCHOOLS, HOSPITALS

Science and Technology Laboratories,
Biology/Physics/
Chemistry Laboratories.

INDUSTRIAL LAUNDRY FACILITIES

OTHER MARKETS SERVED

- Food & Beverage
- Marine Industries
- Plating and Coating Industry
- Marine Laboratory and Aquarium Installations
- Commercial Heating Ventilation and Air
- Air Conditioning (HVAC)
- Brewing and Distilling Industry
- Machine and Welding Industry
- Pulp/Paper, Beverages, Plastics and Glass
- Manufacturing Facilities
- Emission Control Station Facilities
- Industrial Kitchens

OUR ONLINE **SUPPORT**

ZEPHYR : ONLINE SELECTION SOFTWARE FOR ANTI-CORROSION FANS

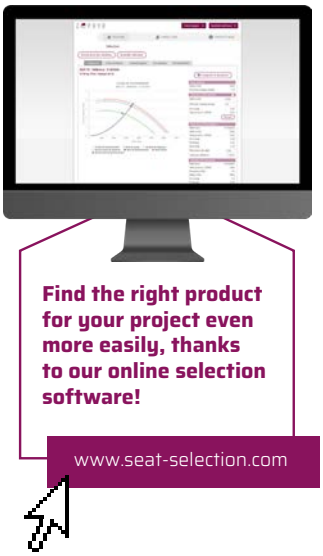

A SOLUTION FOR EVERY NEED!

Our ZEPHYR selection software has been specially designed by SEAT VENTILATION SAS to respond quickly and easily to your technical queries about our anti-corrosion fans/extractors.

IT'S EASY!
With a single click, the selection software helps you choose the best fan suited to your application.
Simply log on, enter the required flow, and pressure parameters, select the fan from the list and access all its technical data.

SPECIFICATIONS

Very easy to use and ergonomic: Zephyr software is accessible to all, and only two parameters are needed to choose a fan.

Quick Selection: instant and autonomous information in one location.

Accessible: available in English and French, in international metric (m³/h, Pa) and US metric (CFM, in.w.g.).
Generates a PDF summarizing information on the selected fan.

CAO 2D/3D BIM SOFTWARE

THE FIRST STEP TO AN EFFECTIVE PROJECT IS DESIGN

SEAT Ventilation is dedicated to simplifying and enhancing our customers' work methods and outcomes by meeting their needs.
BIM (Building Information Modeling) is a digital construction process that facilitates the connection of teams, workflows, and data information.

BIM supports the generation of intelligent data that can be utilized throughout the entire project lifecycle, including planning, design, construction, execution, and commissioning. With designers, architects, and engineers facing increasing stringent work deadlines, minimizing downtime is crucial.

Moreover, we are committed to reducing our ecological footprint.
The BIM process plays a significant part in promoting sustainability within the building industry.
Each component contains information that is consolidated in a shared data environment.
This empowers all project stakeholders to analyze and mitigate its impact on our planet.

At SEAT Ventilation, the development of BIM objects and active participation in BIM projects have become top priorities.

ADVANTAGES

The BIM Platform already contains the technical data for our range of blowers.

OUR
RESEARCH AND DEVELOPMENT LABORATORY

Our test laboratory is an important part of our R&D and engineering departments.
It enables us to develop and test our extraction and regulation products, using equipment certified to **EN 14175**, **IRS ED795** and **ISO 9001-2008** standards.

>> Don't hesitate to come and visit.

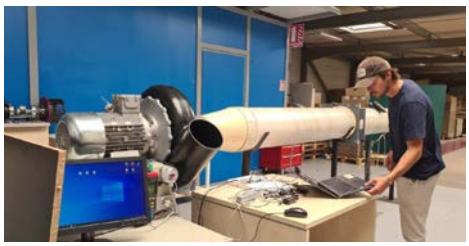

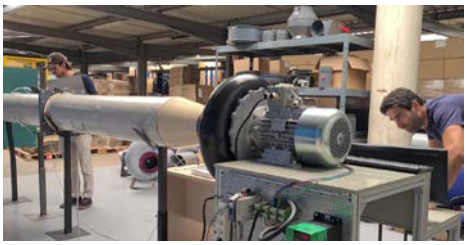

OUR
INVENTORY

We are focused on maximizing customer satisfaction.
With a vast inventory area of over 3,000 m², our customers are sure to find what they're looking for, and to have it delivered without delay.

>> We export to over 100 countries on five continents.

SEAT SERIES
TECHNICAL SPECIFICATIONS

REFERENCE TABLE

Single-Phase Series - Asynchronous

Serie	Motor RPM	Power (kW)	Voltage (V)	Intensity (A)	Weight (kg)	Reference Number
SEAT 15	1450	0,18	230	1,4	8,53	51152010
	2870	0,37	230	2,52	8,23	51153010
SEAT 20	1450	0,18	230	1,4	9,3	51202010
	2870	0,75	230	4,8	10,5	51203010
	2870	1,1	230	6,65	11	51203011
SEAT 25	1450	0,37	230	2,7	11,9	51252010
SEAT 30	1450	1,1	230	7,23	20,7	51302010

Three-Phase Series - Asynchronous

Serie	Motor RPM	Power (kW)	Voltage (V)	Intensity (A)	Weight (kg)	Reference Number
SEAT 15	930	0,18	230/400	1,22/0,7	8,14	51151000
	1450	0,18	230/400	1,09/0,63	8,24	51152000
	2870	0,37	230/400	1,64/0,94	8,23	51153000
SEAT 20	930	0,18	230/400	1,22/0,7	8,9	51201000
	1450	0,18	230/400	1,09/0,63	9	51202000
	2870	0,75	230/400	2,85/1,64	12,5	51203000
	2870	1,1	230/400	4,02/2,31	13,5	51203001
SEAT 25	930	0,18	230/400	1,22/0,7	10,8	51251000
	1450	0,37	230/400	1,85/1,06	11,3	51252000
	1450	0,55	230/400	2,59/1,49	12,4	51252055
	2870	1,5	230/400	5,32/3,06	19,9	51253001
	2870	2.2	230/400	7,56/4,35	23,9	51253000
	2870	3	230/400	11,4/6,6	27,7	51253300
SEAT 30	930	0,55	230/400	2,72/1,57	18,7	51301000
	1450	1,1	230/400	4,32/2,48	21,2	51302000
SEAT 35	730	1,5	230/400	7,45/4,3	37,8	51350000
	930	2,2	230/400	8,85/5,09	47,7	51351000
	1450	4	230/400	13,8/7,95	50,2	51352400
	1450	5,5	400/690	10,7/6,19	62,2	51352000
	1450	7,5	400/690	14,3/8,23	70,4	51352001
SEAT 50	930	4	400/690	9,5/5,5	138,2	51501000
	1450	5,5	400/690	10,5/6,09	133,8	51502000

Three-Phase Series - Atex

Serie	Motor RPM	Power (kW)	Voltage (V)	Intensity (A)	Weight (kg)	Reference Number
SEAT 15	1450	0,18	230/400	1,13/0,65	7,9	51152003
	2870	0,37	230/400	2,1/1,2	10,45	51153003
SEAT 20	1450	0,18	230/400	1,13/0,65	8,6	51202003
	2870	0,75	230/400	3,46/2	13,5	51203003
	2870	1,1	230/400	4,33/2,5	13,5	51203006
SEAT 25	930	0,18	230/400	1,06/0,61	12,5	51251003
	1450	0,37	230/400	1,94/1,12	12,3	51252003
	2870	2,2	230/400	8,7/5	20,9	51253003
SEAT 30	1450	1,1	230/400	5,7/3,3	20,7	51302003
SEAT 35	930	2,2	230/400	9,7/5,6	45,1	51351003
	1450	5,5	400/690	11,5/6,6	66,6	51352003
	1450	7,5	400/690	15/8,68	70,2	51352004
SEAT 50	1450	5,5	400/690	10,5/6,09	133,8	51502003

EC Series

Serie	Motor RPM	Power (kW)	Voltage (V)	Intensity (A)	Weight (kg)	Reference Number
Single-phase motor with integrated frequency converter						
SEAT 15	1720	0,45	220/277	4,3	6,8	52152010
	2500	0,45	220/277	4,3	6,8	52153010
SEAT 20	1720	0,45	360/460	2,7	6,8	52202010
	2100	0,45	360/460	2,7	6,8	52203010
SEAT 25	1720	0,45	220/277	2,5	9,8	52252010
SEAT 30	1720	1	220/277	12	11,2	52302010
Three-phase motor with frequency inverter IP66 / IP20						
SEAT 15	3440	1,2	360/460	2,7	6	52152000
SEAT 20	3440	1,2	360/460	2,7	6	52202000
SEAT 25	1720	0,6	360/460	1,4	9	52252000
	3200	2,6	360/460	2,6	9	52253000
SEAT 30	1720	1,3	360/460	2,7	23,7	52302000
SEAT 35	1720	4	360/460	10	53	52352000

SEAT SERIES

The SEAT Family offers extraction fans manufactured entirely from Polypropylene material, with no ferrous components within the airflow, and adhere to ISO 9001-2008 standards. The direct drive centrifugal fans are resistant to chemicals and corrosive vapours. The blower systems are also available in CIP (Carbon Impregnated Polypropylene) for explosive atmospheres.
Performance ranges from 40-1900 (Pa) static pressure and flow rates from 50-15000 CMH.
SEAT Ventilation polypropylene fans are utilized in laboratory facilities and mostly industrial extraction locations. They are simple to install, small footprint, lightweight, and offer excellent airflow/pressure ratios. All extraction systems are enhanced with UV-inhibitor up to T° 60 °C and the material is recyclable.

SEAT 15	SEAT 20	SEAT 25	SEAT 30	SEAT 35	SEAT 50
Flow rate: **50-700 m³/h** **30 to 530 CFM**	Flow rate: **200-1600 m³/h** **118 to 1060 CFM**	Flow rate: **500-3000 m³/h** **295 to 2060 CFM**	Flow rate: **700-4500 m³/h** **415 to 3120 CFM**	Flow rate: **1800-9000 m³/h** **1060 to 5885 CFM**	Flow rate: **5000-15000 m³/h** **2940 to 8830 CFM**
P max : **600 Pa**	P max : **1400 Pa**	P max : **2000 Pa**	P max : **800 Pa**	P max : **1500 Pa**	P max : **1700 Pa**

Asynchronous motor, single-phase or three phase type B34 or B35 for 35 or 50, with IP55 protection. Motor class IE3 rated (for power equal to or greater than 0.75kW) and positioned outside of chemical latent airflow.

Optional ATEX Series: Class IE3 rated ATEX Zone 2 Category 3 GAS CT4, explosion resistant Asynchronous motor.

Optional EC Motor Series: Simple to install electronically communicated synchronous motor.

EC motors provide energy savings and increased airflow performance. Available in IP65 protection rating for single-phase motors and IP55 protection rating for three-phase motors.

Motor Support Plates and Inlet Flanges supported by high grade stainless-steel hardware and high strength elastomeric O-rings.

Optional CIP (Carbon Impregnated Polypropylene) anti-static motor support plates and inlet flanges.

Forward curved centrifugal type impeller made of injection molded PPH. Fan wheel supplied with hub cap constructed of PPH. Wheels electronically and dynamically balanced to ISO 1940.

Optional CIP (Carbon Impregnated Polypropylene) anti-static infused Impeller.

Polypropylene end hub cap for vapor and gas tight motor shaft end and hardware seal.

Optional CIP (Carbon Impregnated Polypropylene) anti-static end hub cap.

UV-Resistant Polypropylene Fan Housing. Capable to be positioned in 8-discharge orientations. Available in two direction rotations (LG (Counter-Clockwise)/RD (Clockwise)), (Exception to models SEAT35 and SEAT50, available only in LG rotation).

Optional CIP (Carbon Impregnated Polypropylene) anti-static fan housing.

MOUNTING BRACKETS AND ACCESSORIES

See Pages 42 - 48

Metal Stand, Enclosed Pedestal in PP with Anti-UV Treatment, Roof Kit, Flexible Sleeves, Stainless-Steel Jubilee Clips, Frequency Inverter, Exhaust cap with Anti-UV Treatment, Switch 3-poles IP65, Anti Vibration Mountings, Back Draft Damper, Adjustable Damper, Purge Connection on the Bottom of the Fan Casing.

All our fans are available in ATEX version

EXPLODED VIEW

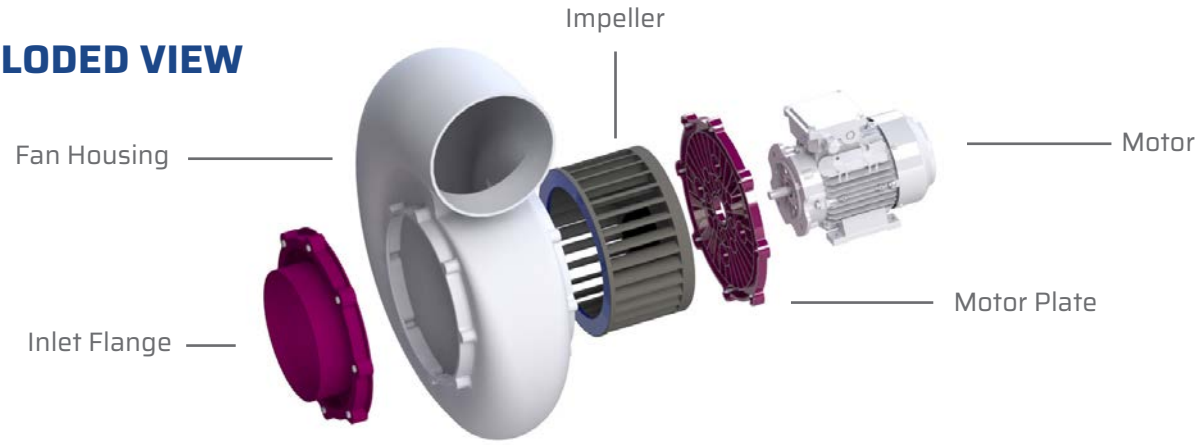

SEAT SERIES
SEAT 15

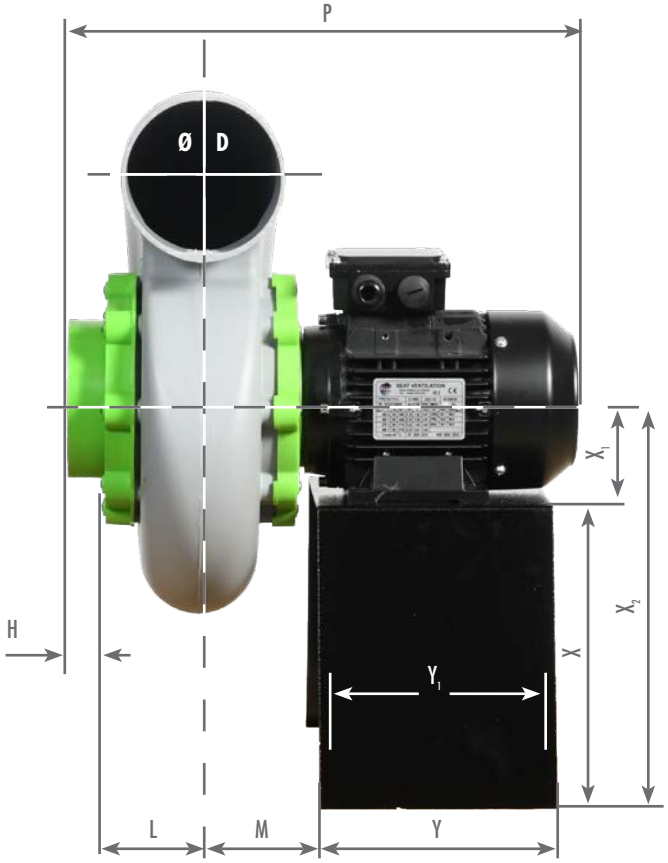

LG POSITION

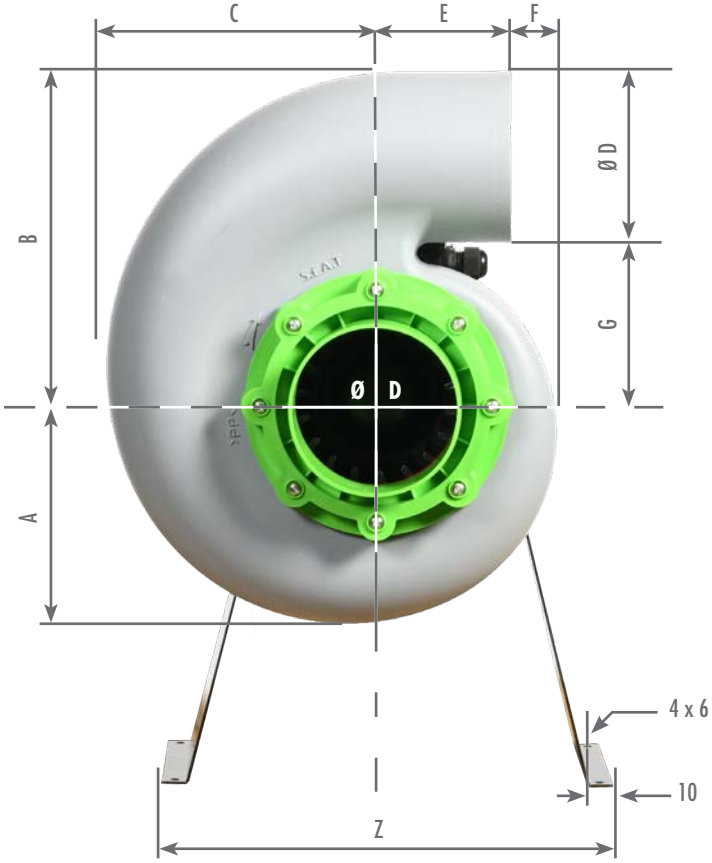

LG POSITION

Available in

Dimension (mm) - Metal stand not included (see accessories)																
A	B	C	ØD	E	F	G	H	L	M	P	Y	Y_1	Z	X	X_1	X_2
170	240	203	125	100	32	115	30	70	80	360	180	160	340	240	71	311

Left Rotation (Counter-Clockwise)

LG 180 LG 225 LG 270 LG 315 LG 0 LG 45 LG 90 LG 135

Right Rotation (Clockwise)

RD 225 RD 270 RD 315 RD 0 RD 45 RD 90 RD 135 RD 180

NOISE LEVELS

Acoustic (dB)					Frequency Octave (Hz)							
Speed T/min	Qv (m^3/h)	Sp (Pa)	LwA dB(A)	LpA* dB(A)	63	125	250	500	1000	2000	4000	8000
1450	245	106	67	46	82	76	71	64	59	48	42	24
2870	414	485	81	61	97	91	86	79	74	63	57	49

*Acoustic pressure Lp at 3 meters - Outlet acoustic data available on request.

SEAT SERIES - **SEAT 15**

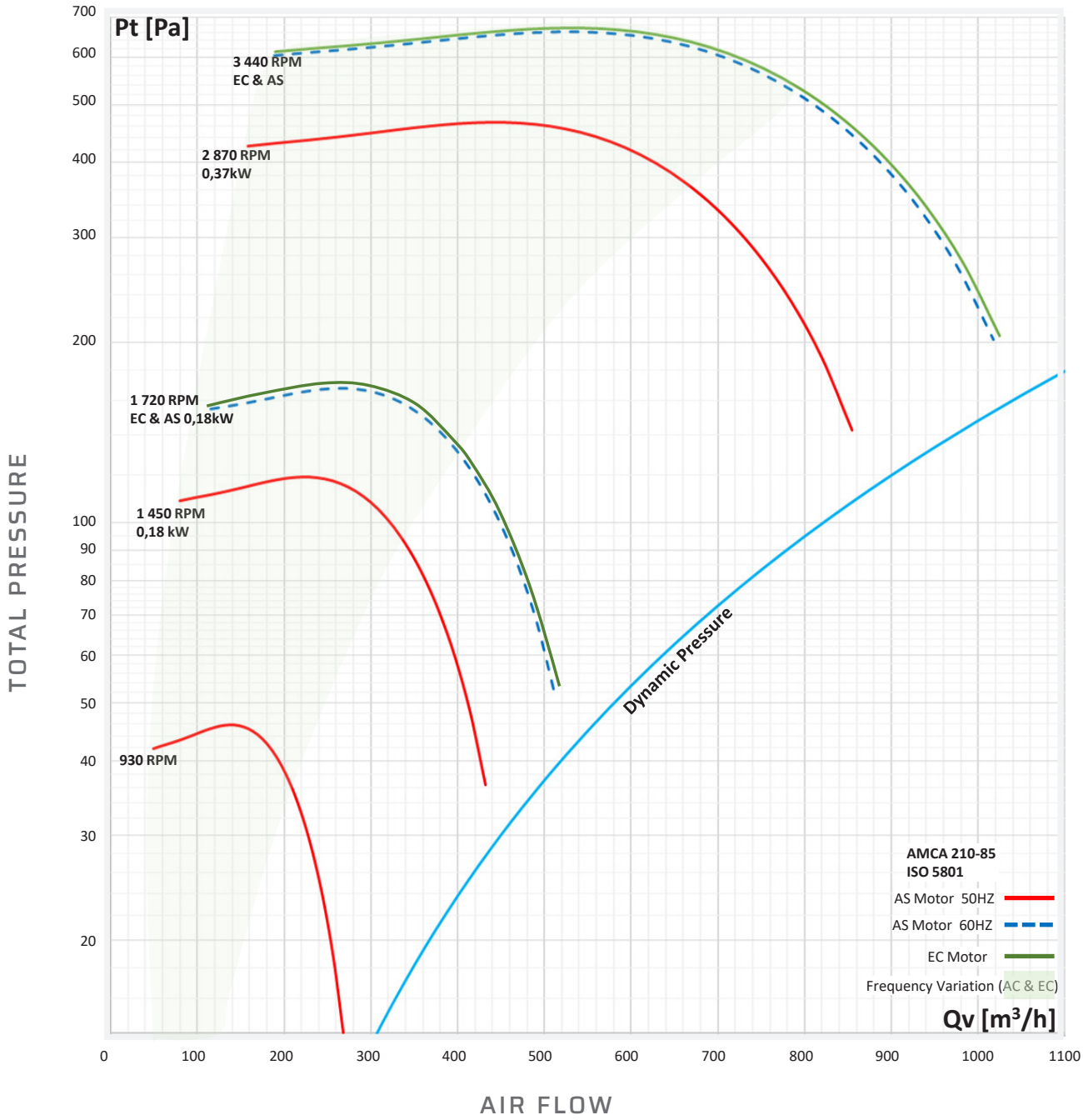

ELECTRICAL FEATURES

Motor	Power (kW)	Motor RPM	Voltage (V)	Intensity (A)	Weight (kg)	Reference Number
IP55 Asynchronous Single-Phase	0 ,18	1450	230	1,4/1,4	8,53	51152010
	0,37	2870	230	2,52/2,52	8,23	51153010
IP65 EC Single-Phase	0,6	1720	220/277	4,30	8,3	52152010
	0,6	2500	220/277	4,30	8,3	52153010
IP55 Asynchronous Three-Phase	0,18	930	230/400	1,22/0.7	8,14	51151000
	0,18	1450	230/400	1,09/0,63	8,24	51152000
	0,37	2870	230/400	1,64/0,94	8,23	51153000
IP66 EC Three-Phase	1,2	3440	360/460	2,7	7,7	52152000
IP55 Asynchronous Three-Phase ATEX Ex	0,18	1450	230/400	1,13/0,65	7,9	51152003
	0,37	2870	230/400	2,1/1,2	10,45	51153003

Mandatory PTC Sensor for ATEX motor with Frequency Inverter.

SEAT SERIES
SEAT 20

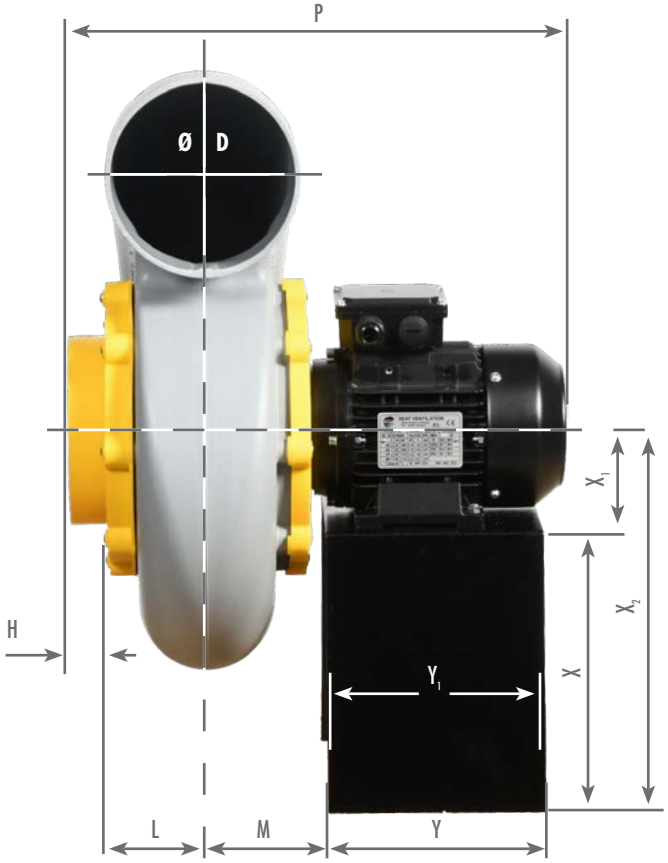

LG POSITION

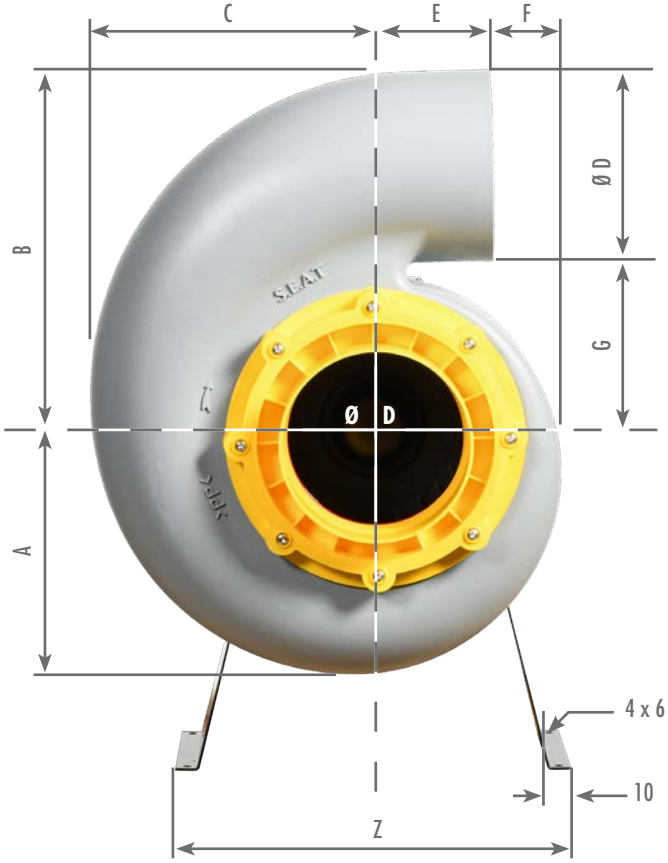

LG POSITION

Available in

Dimension (mm) - Metal stand not included (see accessories)																
A	B	C	ØD	E	F	G	H	L	M	P	Y	Y_1	Z	X	X_1	X_2
208	303	240	160	100	57	143	32	84	94	390	180	160	340	240	71	311

Left Rotation (Counter-Clockwise)

LG 180 LG 225 LG 270 LG 315 LG 0 LG 45 LG 90 LG 135

Right Rotation (Clockwise)

RD 225 RD 270 RD 315 RD 0 RD 45 RD 90 RD 135 RD 180

NOISE LEVELS

Acoustic (dB)					Frequency Octave (Hz)							
Speed T/min	Qv (m^3/h)	Sp (Pa)	LwA dB(A)	LpA* dB(A)	63	125	250	500	1000	2000	4000	8000
1450	760	188	76	56	93	76	80	73	66	55	53	46
2870	1500	735	91	70	108	91	95	88	81	70	67	61

*Acoustic pressure Lp at 3 meters - Outlet acoustic data available on request.

SEAT SERIES - **SEAT 20**

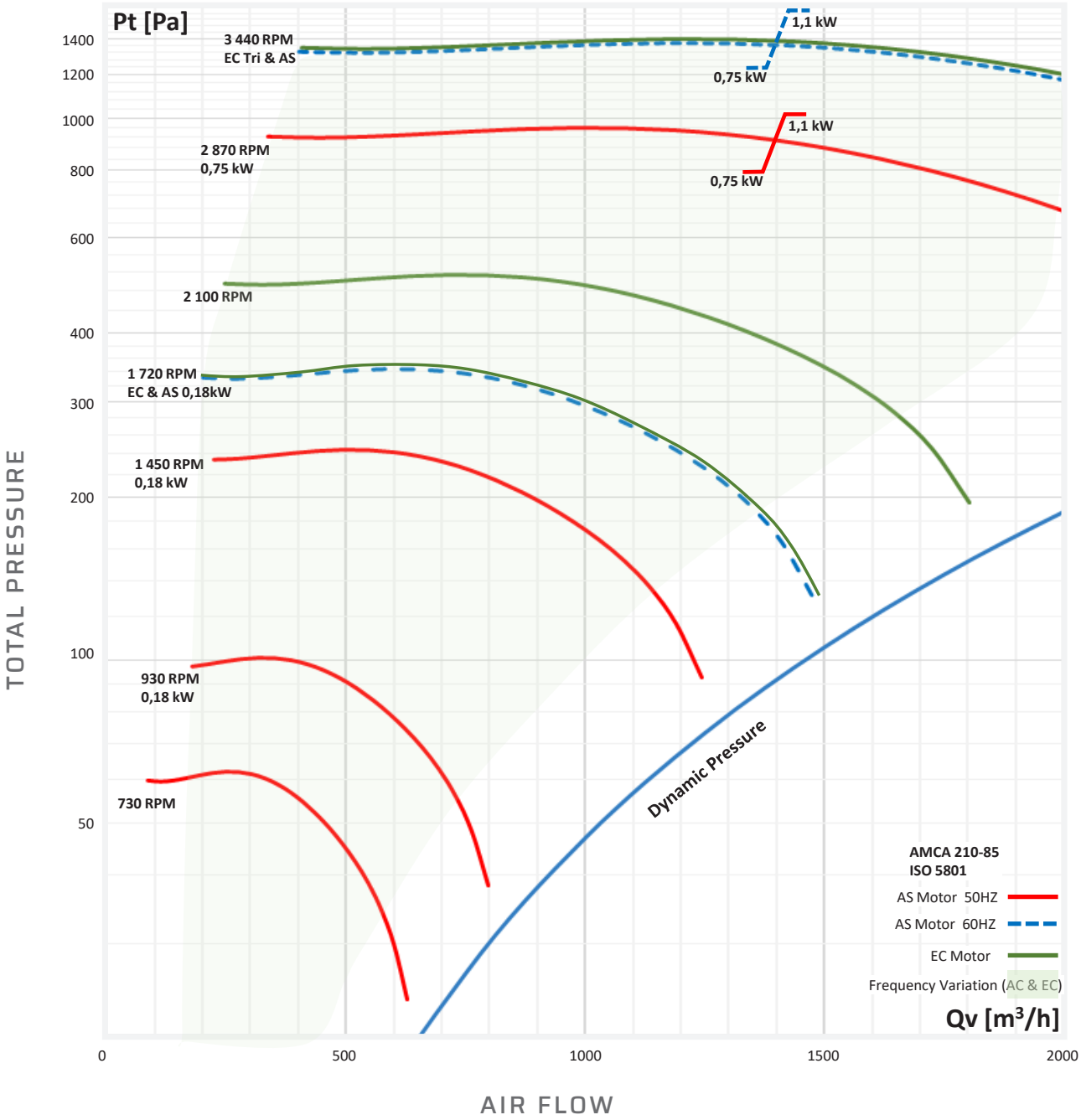

ELECTRICAL FEATURES

Motor	Power (kW)	Motor RPM	Voltage (V)	Intensity (A)	Weight (kg)	Reference Number
IP55 Asynchronous Single-Phase	0,18	1450	230	1,4/1,4	9,3	51202010
	0,75	2870	230	4,8/4,8	10,5	51203010
	1,1	2870	230	6,65	11	51203011
IP65 EC Single-Phase	0,6	1720	220/277	4,30	9,2	52202010
	0,6	2100	220/277	4,30	8,3	52203010
IP55 Asynchronous Three-Phase	0,18	930	230/400	1,64/0,94	8,23	51201000
	0,18	1450	230/400	1,09/0,63	9	51202000
	0,75	2870	230/400	2,85/1,64	12,5	51203000
	1,1	2870	230/400	4,02/2,31	13,5	51203001
IP66 EC Three-Phase	1,2	3440	360/460	2,7	9	52202000
IP55 Asynchronous Three-Phase ATEX Ex	0,18	1450	230/400	1,13/0,65	7,9	51202003
	0,75	2870	230/400	3,46/2	13,5	51203003

Mandatory PTC Sensor for ATEX motor with Frequency Inverter.

SEAT SERIES
SEAT 25

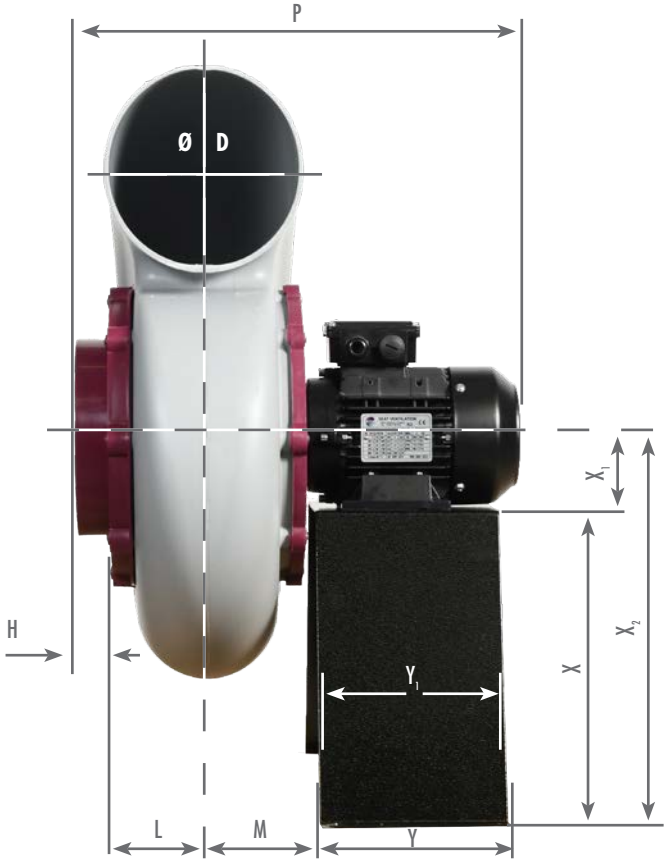

LG POSITION

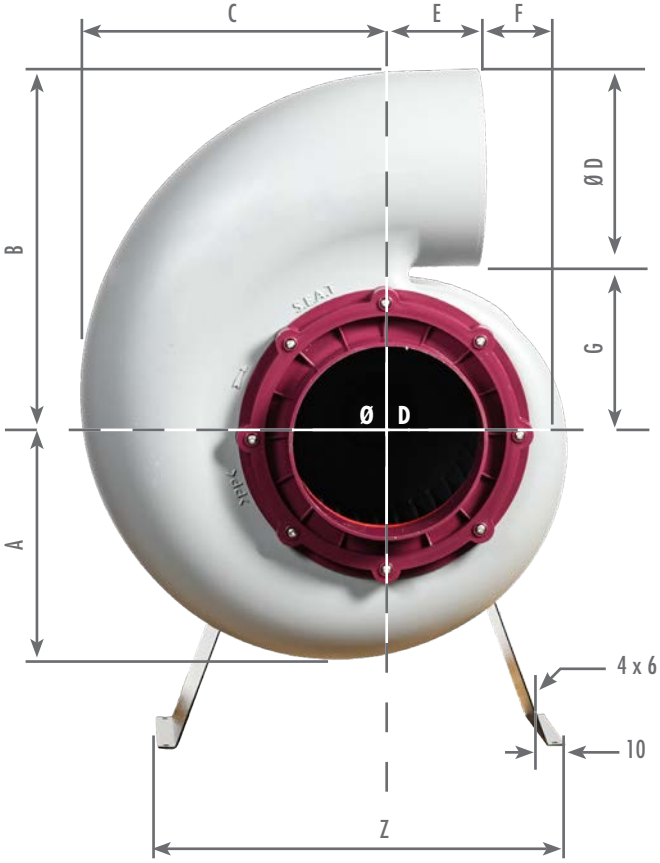

LG POSITION

Available in

Dimension (mm) - Metal stand not included (see accessories) Motor axis heights may vary according to the type of motor used																	
RPM	A	B	C	ØD	E	F	G	H	L	M	P	Y	Y_1	Z	X	X_1	X_2
930 / 1450	248	365	310	200	103	92	165	35	95	105	430	180	160	420	300	71	371
2870	248	365	310	200	103	92	165	35	95	105	515	180	160	420	300	90	390

Left Rotation (Counter-Clockwise)

LG 180 LG 225 LG 270 LG 315 LG 0 LG 45 LG 90 LG 135

Right Rotation (Clockwise)

RD 225 RD 270 RD 315 RD 0 RD 45 RD 90 RD 135 RD 180

NOISE LEVELS

Acoustic (dB)					Frequency Octave (Hz)							
Speed (T/min)	Qv (m^3/h)	Sp (Pa)	LwA dB(A)	LpA* dB(A)	63	125	250	500	1000	2000	4000	8000
1450	1330	322	78	57	100	81	81	75	69	61	58	53
2870	2630	1261	93	72	115	96	96	90	84	76	73	68

*Acoustic pressure Lp at 3 meters - Outlet acoustic data available on request.

SEAT SERIES - **SEAT 25**

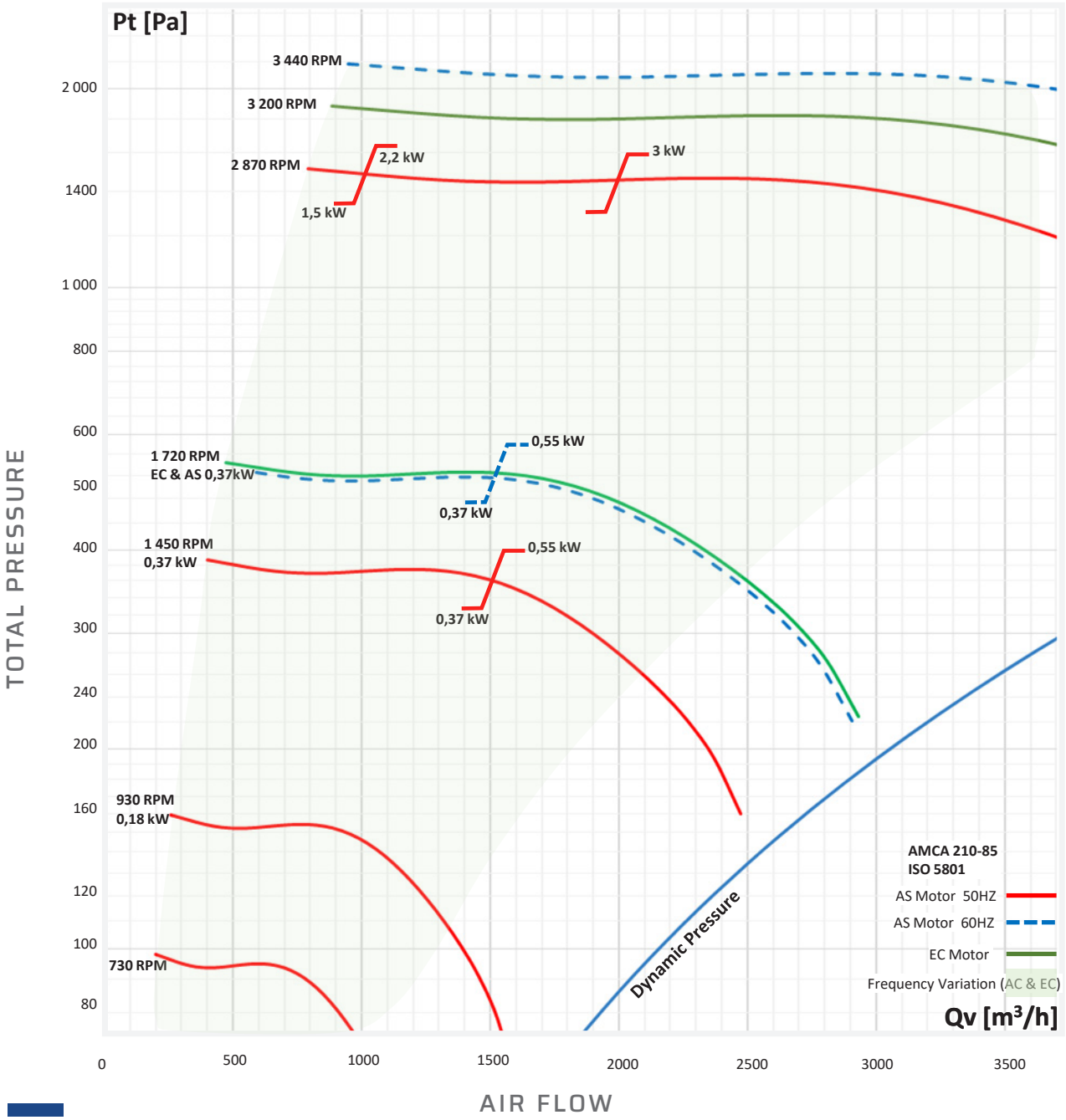

ELECTRICAL FEATURES

Motor	Power (kW)	Motor RPM	Voltage (V)	Intensity (A)	Weight (kg)	Reference Number
IP55 Asynchronous Single-Phase	0,37	1450	230	2,7/2,7	11,9	51252010
IP65 EC Single-Phase	0,6	1720	220/277	4,30	11,9	52252010
IP55 Asynchronous Three-Phase	0,18	930	230/400	1,22/0,7	10,8	51251000
	0,37	1450	230/400	1,85/1,06	11,3	51252000
	0,55	1450	230/400	2,59/1,49	12,4	51252055
	1,5	2870	230/400	5,32/3,06	19,9	51253001
	2,2	2870	230/400	7,56/4,35	23,9	51253000
	3	2870	230/400	11,4/6,6	27,7	51253300
IP66 EC Three-Phase	0,6	1720	360/460	1,4	11,5	52252000
	2,6	3200	360/460	4,9	23,9	52253000
IP55 Asynchronous Three-Phase ATEX Ex	0,18	930	230/400	1,06/0,61	12,8	51251003
	0,37	1450	230/400	1,94/1,12	12,3	51252003
	2,2	2870	230/400	8,7/5	20,9	51253003
	3	2870	230/400	11,4/6,6	27,7	51253007

Mandatory PTC Sensor for ATEX motor with Frequency Inverter.

SEAT SERIES
SEAT 30

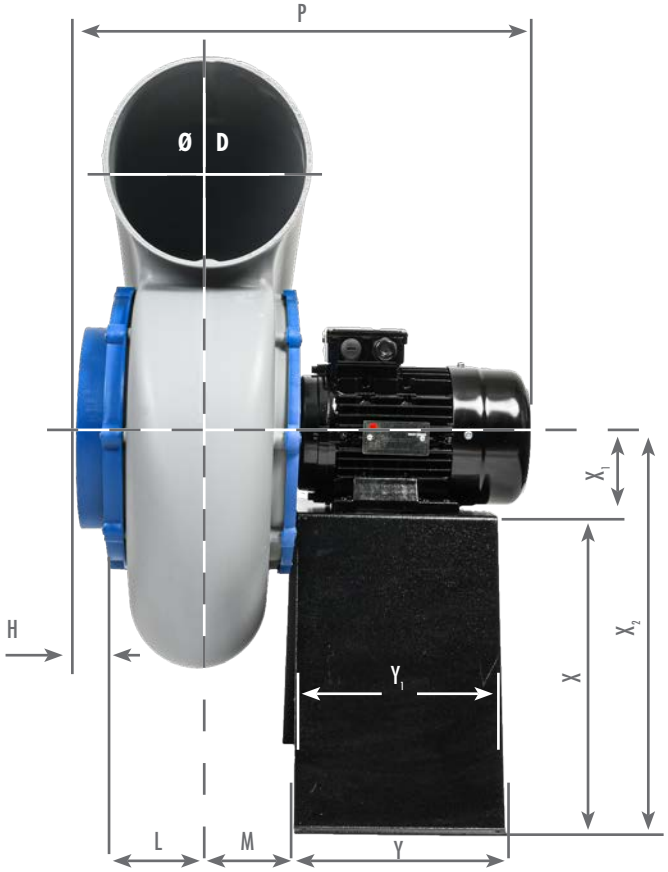

LG POSITION

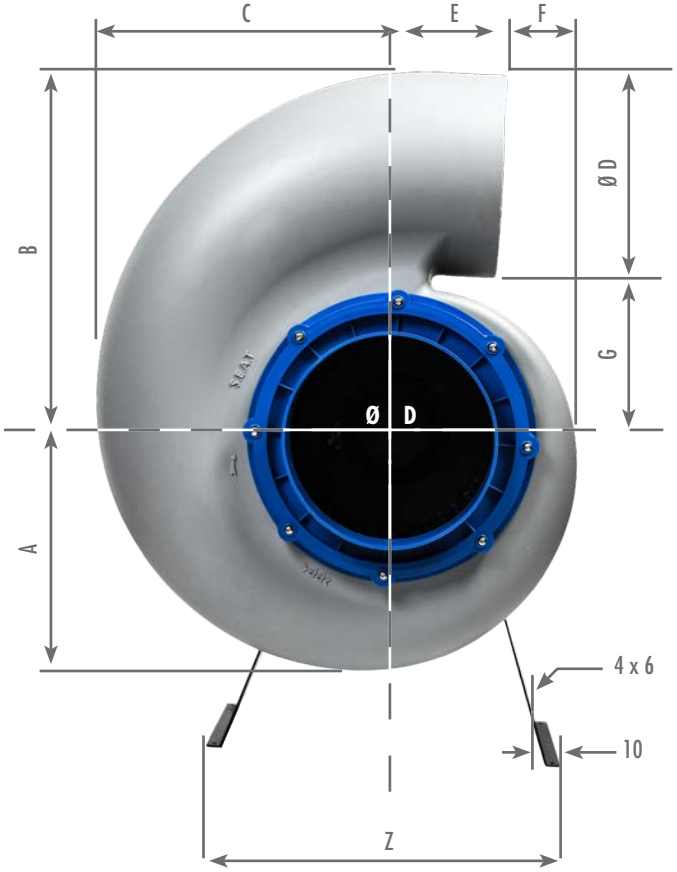

LG POSITION

Available in

Dimension (mm) - Metal stand not included (see accessories) Motor axis heights may vary according to the type of motor used																	
RPM	A	B	C	ØD	E	F	G	H	L	M	P	Y	Y_1	Z	X	X_1	X_2
930	300	450	373	250	117	112	198	35	110	120	510	240	220	460	370	80	450
1450	300	450	373	250	117	112	198	35	110	120	540	240	220	460	370	90	460

Left Rotation (Counter-Clockwise)

LG 180 LG 225 LG 270 LG 315 LG 0 LG 45 LG 90 LG 135

Right Rotation (Clockwise)

RD 225 RD 270 RD 315 RD 0 RD 45 RD 90 RD 135 RD 180

NOISE LEVELS

Acoustic (dB)					Frequency Octave (Hz)							
Speed (T/min)	Qv (m^3/h)	Sp (Pa)	LwA dB(A)	LpA* dB(A)	63	125	250	500	1000	2000	4000	8000
930	1590	206	72	51	86	82	72	68	66	62	57	52
1450	2476	500	82	61	96	91	81	78	76	72	67	61

*Acoustic pressure Lp at 3 meters - Outlet acoustic data available on request.

SEAT SERIES - **SEAT 30**

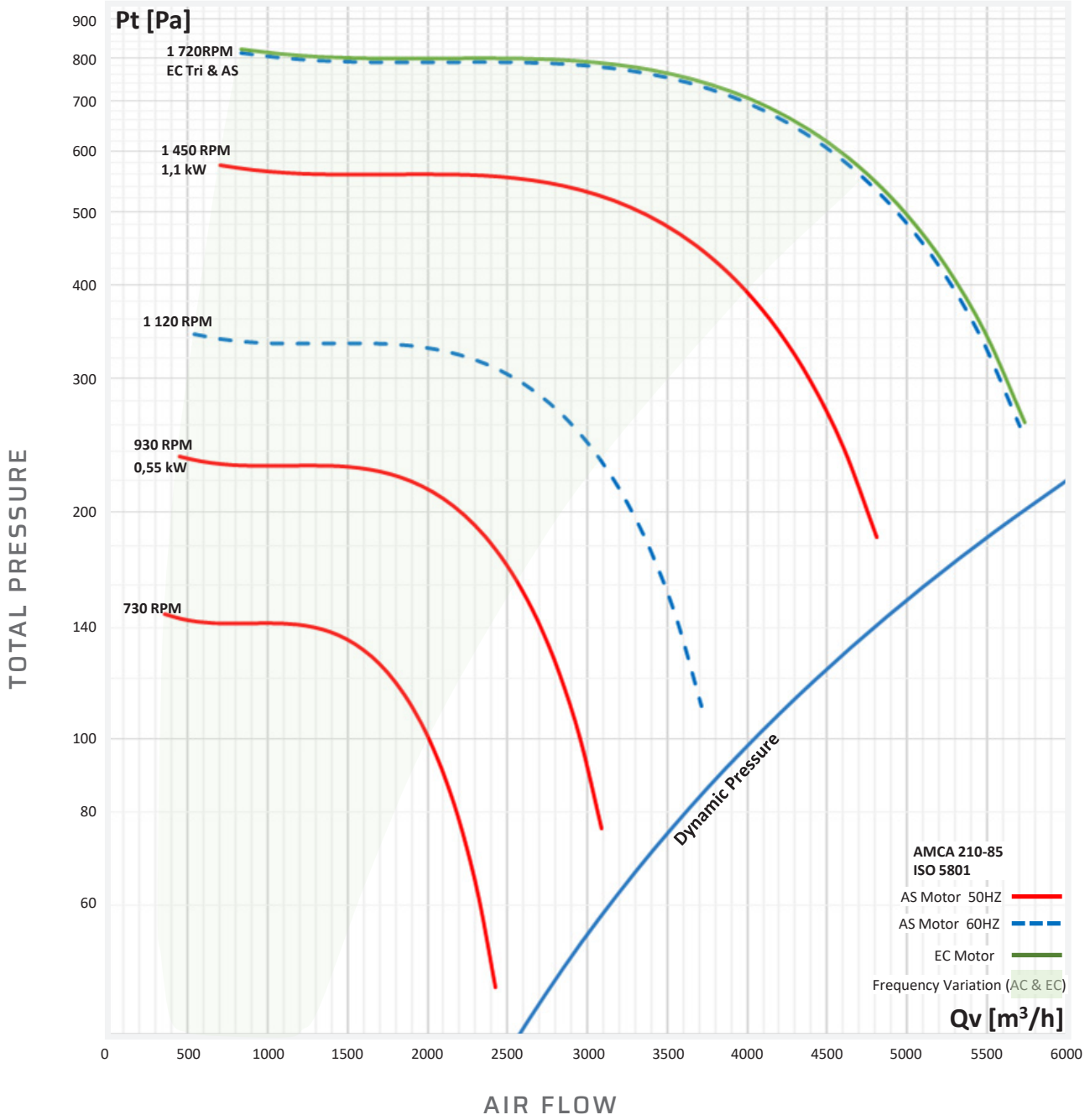

ELECTRICAL FEATURES

Motor	Power (kW)	Motor RPM	Voltage (V)	Intensity (A)	Weight (kg)	Reference Number
P55 Asynchronous Single-Phase	1,1	1450	230	7,23/7,23	20,7	51302010
IP65 EC Single-Phase	1	1720	220/277	4,30	21,1	52302010
IP55 Asynchronous Three-Phase	0,55	930	230/400	2,72/1,57	18,7	51301000
	1,1	1450	130/400	7,45/4,3	37,8	51302000
IP66 EC Three-Phase	1,3	1720	360/460	1,7	23,7	52302000
IP55 Asynchronous Three-Phase ATEX Ex	0,55	950	230/400	2,60/1,50	11	51301003
	1,1	1450	230/400	10/5,7	45,1	51302003

Mandatory PTC Sensor for ATEX motor with Frequency Inverter.

SEAT SERIES
SEAT 35

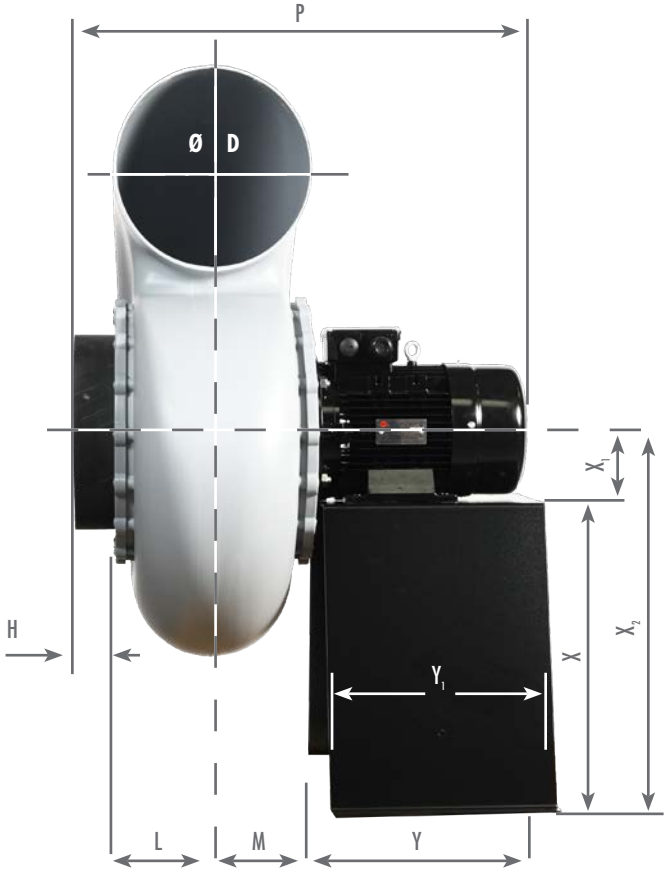

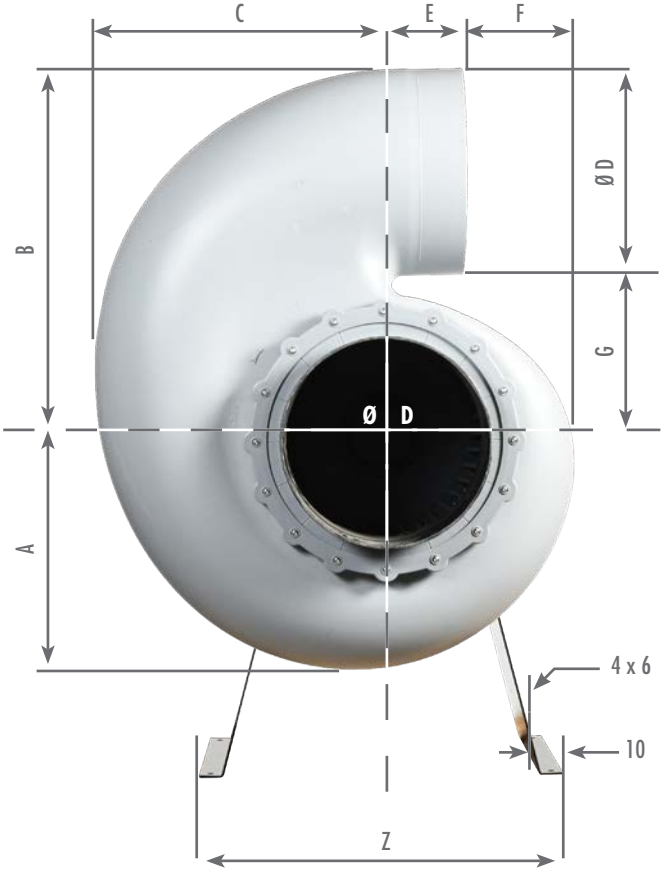

ONLY LG POSITION

Available in

Dimension (mm) - Metal stand not included (see accessories) Motor axis heights may vary according to the type of motor used																		
RPM	A	B	C	ØD	E	F	G	H	L	M	P	S	Y	Y_1	Z	X	X_1	X_2
930	370	570	450	315	130	170	255	60	150	170	724	334	350	314	600	468	112	580
1450	370	570	450	315	130	170	255	60	150	170	792	402	350	314	600	468	112	580
1450 ATEX or 7,5 kW	370	570	450	315	130	170	255	60	150	170	822	432	350	314	600	468	132	600

Left Rotation (Counter-Clockwise)

LG 180 LG 225 LG 270 LG 315 LG 0 LG 45 LG 90 LG 135

NOISE LEVELS

Acoustic (dB)					Frequency Octave (Hz)							
Speed (T/min)	Qv (m^3/h)	Sp (Pa)	LwA dB(A)	LpA* dB(A)	63	125	250	500	1000	2000	4000	8000
930	3770	290	79	59	86	88	79	76	73	71	68	62
1450	5880	704	89	69	96	98	89	85	82	81	77	71

*Acoustic pressure Lp at 3 meters - Outlet acoustic data available on request.

SEAT SERIES - **SEAT 35**

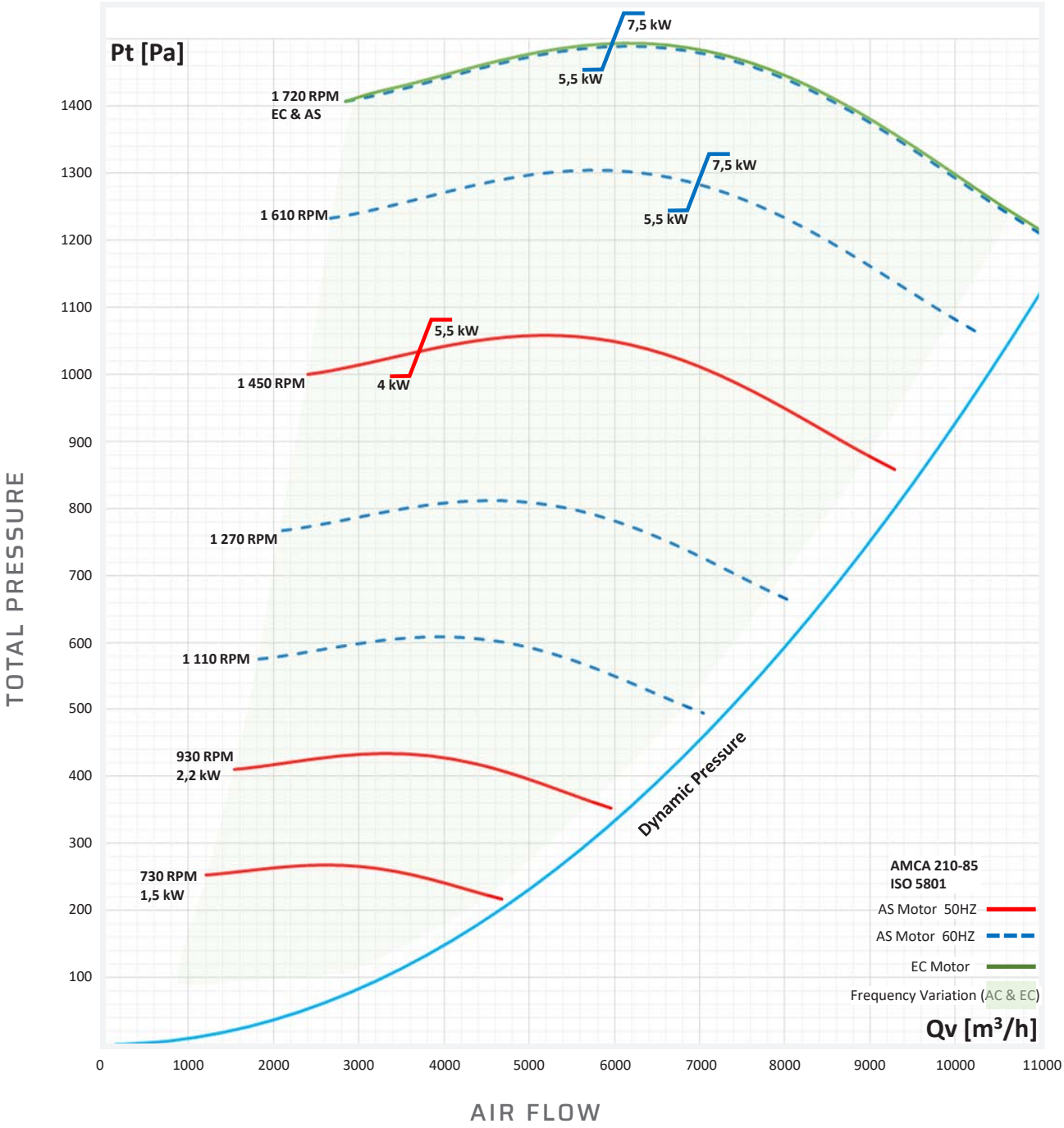

ELECTRICAL FEATURES

Motor	Power (kW)	Motor RPM	Voltage (V)	Intensity (A)	Weight (kg)	Reference Number
IP55 Asynchronous Three-Phase	1,5	730	230/400	7,45/4,3	21,2	51350000
	2,2	930	230/400	8,85/5,09	47,7	51351000
	4	1450	230/400	13,8/7,95	50,2	51352400
	5,5	1450	400/690	10,7/6,19	62,2	51352000
	7,5	1450	400/690	14,3/8,23	70,4	51352001
IP66 EC Three-Phase	4	1720	360/460	10	53	52352000
IP55 Asynchronous Three-Phase ATEX	2,2	930	230/400	9,7/5,6	45,1	51351003
	5,5	1450	400/690	11,5/6,6	66,6	51352003
	7,5	1450	400/690	15/8,68	70,2	51352004

Mandatory PTC Sensor for ATEX motor with Frequency Inverter.

SEAT SERIES
SEAT 50

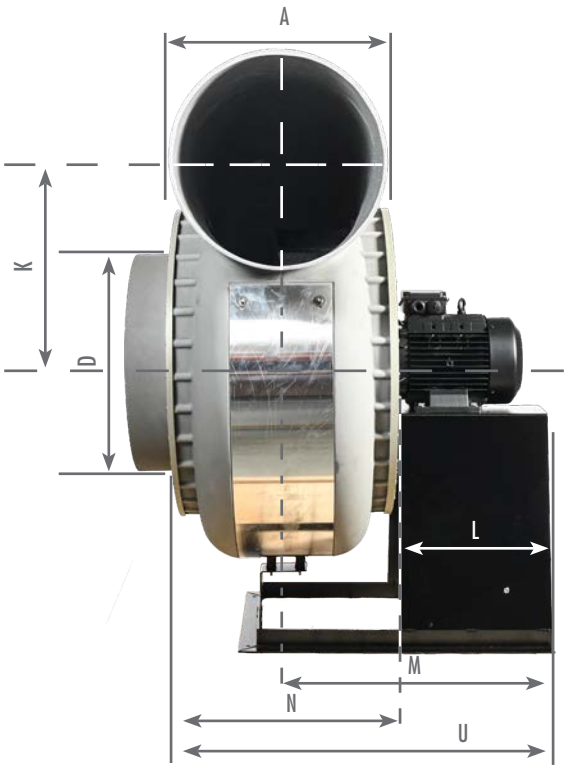

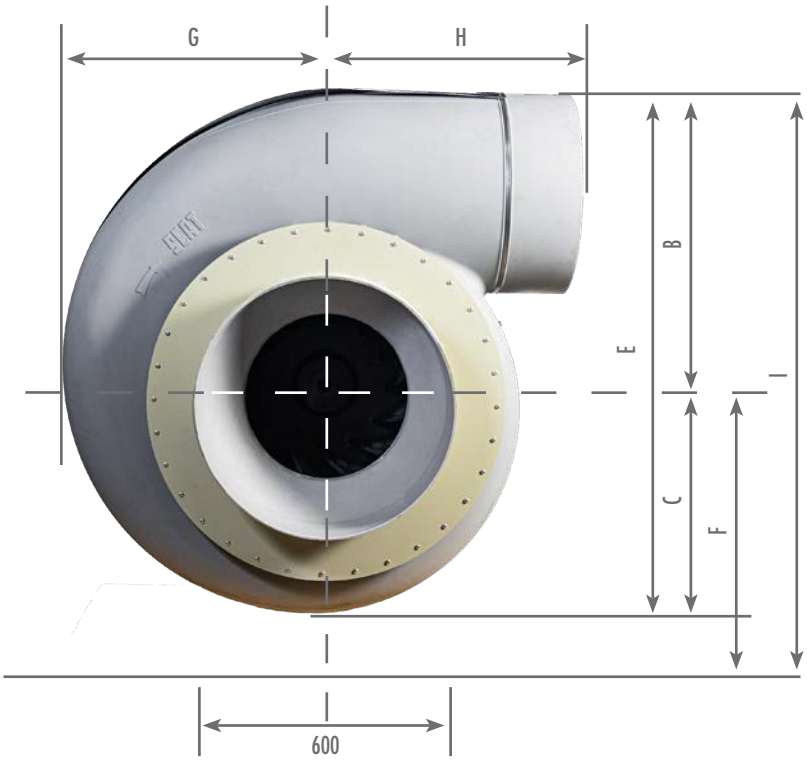

ONLY LG POSITION

Fan includes:
- Metal stand
- Aluminium protection plate

Available in Ex

Dimension (mm) - Metal stand not included (see accessories)															
A	D	B	C	E	F	G	H	I	I LG90	K+F	K	L	M	N	U
500	600	765	550	1315	740	660	610	1350	1505	1255	515	400	715	620	1020

Left Rotation (Counter-Clockwise)

LG 180 LG 225 LG 270 LG 315 LG 0 LG 45 LG 90 LG 135

NOISE LEVELS

Acoustic (dB)					Frequency Octave (Hz)							
Speed (T/min)	Qv (m^3/h)	Sp (Pa)	LwA dB(A)	LpA* dB(A)	63	125	250	500	1000	2000	4000	8000
930	3165	723	79	58	95	87	82	73	71	65	58	53
	5100	533	78	58	93	83	80	74	74	64	57	52
1450	4935	1757	88	68	105	96	92	83	81	75	68	63
	7950	1300	88	67	103	93	90	83	84	74	67	62

*Acoustic pressure Lp at 3 meters - Outlet acoustic data available on request.

SEAT SERIES - **SEAT 50**

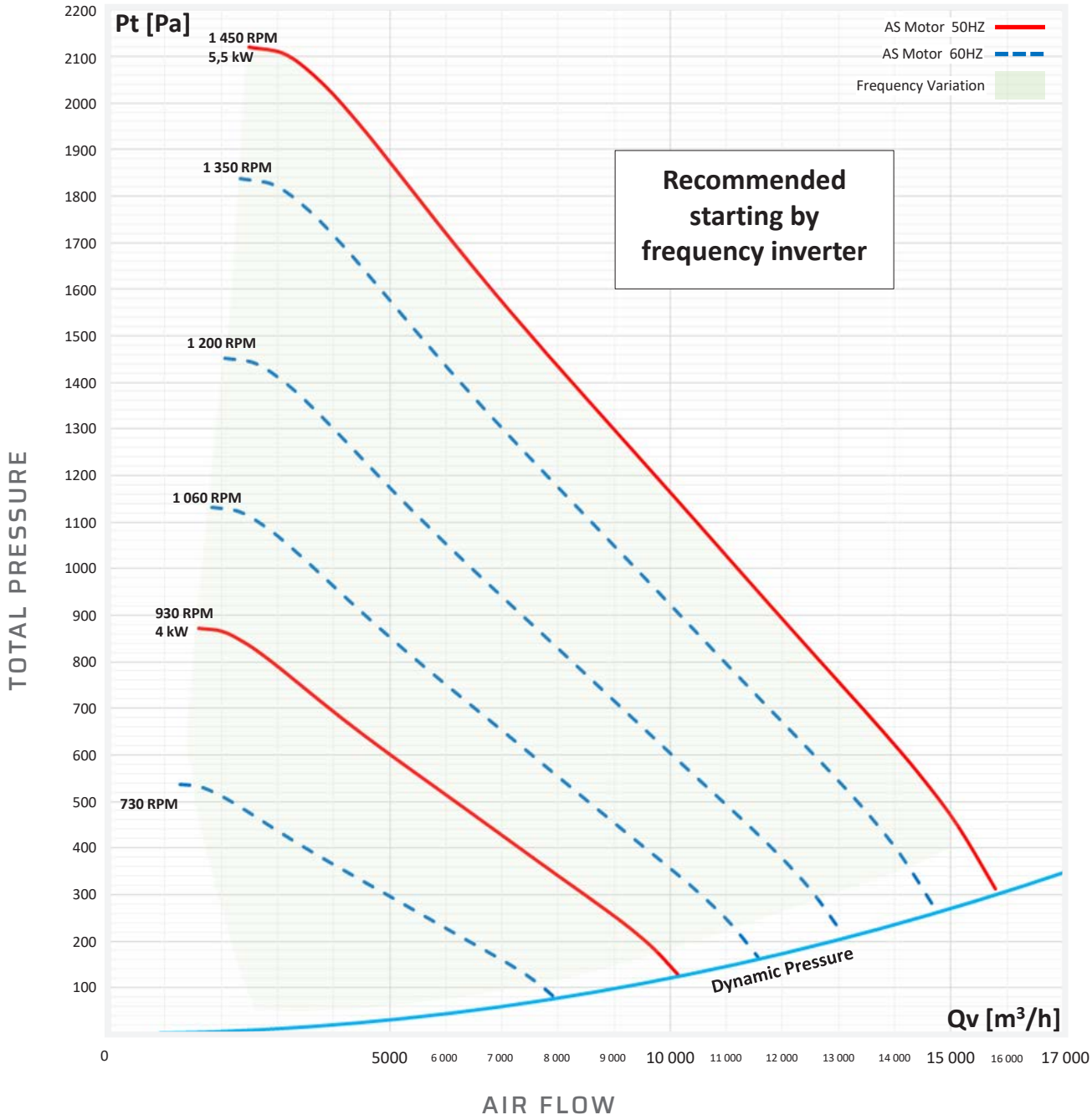

ELECTRICAL FEATURES

Motor	Power (kW)	Motor RPM	Voltage (V)	Intensity (A)	Weight (kg)	Reference Number
IP55 Asynchronous Three-Phase	4	930	400/690	9,5/5,5	138,2	51501000
	5,5	1450	400/690	10,5/6,9	133,8	51502000
IP55 Asynchronous Three-Phase ATEX Ex	5,5	1450	400/690	10,5/6,9	133,8	51502003

Mandatory PTC Sensor for ATEX motor with Frequency Inverter.

STORM SERIES
TECHNICAL SPECIFICATIONS

REFERENCE TABLE

Single-Phase Series - Asynchronous

Serie	Motor RPM	Power (kW)	Voltage (V)	Intensity (A)	Weight (kg)	Reference Number
STORM 10	1200	0,06	230	0,31	2,75	61102010RE
	1450	0,09	230	0,84	4,17	61102010
	2870	0,12	230	0,95	3,8	61103010
STORM 12	1450	0,18	230	1,40	7,84	61122010
	2870	0,37	230	2,52	7,54	61123010
STORM 14	2870	1,1	230	6,52	13,73	61143010

Three-Phase Series

Asynchronous

Serie	Motor RPM	Power (kW)	Voltage (V)	Intensity (A)	Weight (kg)	Reference Number
STORM 10	1450	0,09	230/400	0,79/0,45	4,17	61102000
	2870	0,12	230/400	0,63/0,36	4,17	61103000
STORM 12	1450	0,18	230/400	1,09/0,63	7,50	61122000
	2870	0,37	230/400	1,64/0,94	7,54	61123000
STORM 14	2870	1,1	230/400	4,02/2,31	13,3	61143000
STORM 16	2870	2,2	230/400	7,56/4,35	23,2	61163000
STORM 18	2870	7,5	400/690	14,3/8,23	70,4	61183000

Atex Serie

Serie	Motor RPM	Power (kW)	Voltage (V)	Intensity (A)	Weight (kg)	Reference Number
STORM 10	1450	0,06	230/400	0,59/0,34	6	61102003
	2870	0,09	230/400	0,69/0,4	6,2	61103003
STORM 12	1450	0,18	230/400	1,13/0,65	12	61122003
	2870	0,37	230/400	2,1/1,2	9,75	61123003
STORM 14	2870	1,1	230/400	4,5/2,6	13,2	61143003
STORM 16	2870	2,2	230/400	8,7/5	20,2	61163003
STORM 18	2870	7,5	400/690	14,3/8,23	70,4	61183003

STORM SERIES

The Storm family includes chemical and corrosive-resistant fans with higher static pressure. Performance ranges from 50 to 4500 (Pa) static pressure and flow rates from 25 to 6000 CMH.
Ventilation of acid tanks, waste water tanks, scrubbers and chemical storage cabinets are just a few examples where the Storm family can be used.
Made from recyclable UV-resistant polypropylene, it can withstand temperatures up to T° 60°C.

STORM 10
Flow rate:
25-200 m³/h
15 to 130 CFM
P max : **600 Pa**

STORM 12
Flow rate:
50-500 m³/h
30 to 350 CFM
P max : **1200 Pa**

STORM 14
Flow rate:
400-1000 m³/h
235 to 765 CFM
P max : **2000 Pa**

STORM 16
Flow rate:
500-1800 m³/h
295 to 1240 CFM
P max : **3000 Pa**

STORM 18
Flow rate:
1800-5000 m³/h
1060 to 5885 CFM
P max : **4500 Pa**

Asynchronous motor: single-phase or three-phase type B34, with an IP55 protection rating. The motor must be at least class IE3 (for any power equal to or greater than 0.75 kW) and positioned outside the air flow.

Ex In the ATEX version, the explosion-proof Asynchronous motor must be at least class IE3 ATEX Zone 2 Category 3 GAS CT4.

UV-resistant flanges supplied with stainless steel screws and specialty elastomer O-rings.

Ex Antistatic flanges.

Forward curved centrifugal type impeller made of injection molded PPH. Fan wheel supplied with hub cap constructed of PPH. Wheels electronically and dynamically balanced to ISO 1940.

Ex Antistatic impeller.

Polypropylene hub cap for watertight motor shaft mounting.

Ex Antistatic hub caps.

Anti-UV-treated polypropylene Fan Housing with 8 discharge positions.

Ex Antistatic Fan Housing.

MOUNTING BRACKETS AND ACCESSORIES

See Pages 42 - 48

Metal Stand, Enclosed Pedestal in PP with Anti-UV Treatment, Roof Kit, Flexible Sleeves, Stainless-Steel Jubilee Clips, Frequency Inverter, Exhaust cap with Anti-UV Treatment, Switch 3-poles IP65, Anti Vibration Mountings, Back Draft Damper, Adjustable Damper, Purge Connection on the Bottom of the Fan Casing.

All our fans are available in ATEX version Ex

EXPLODED VIEW

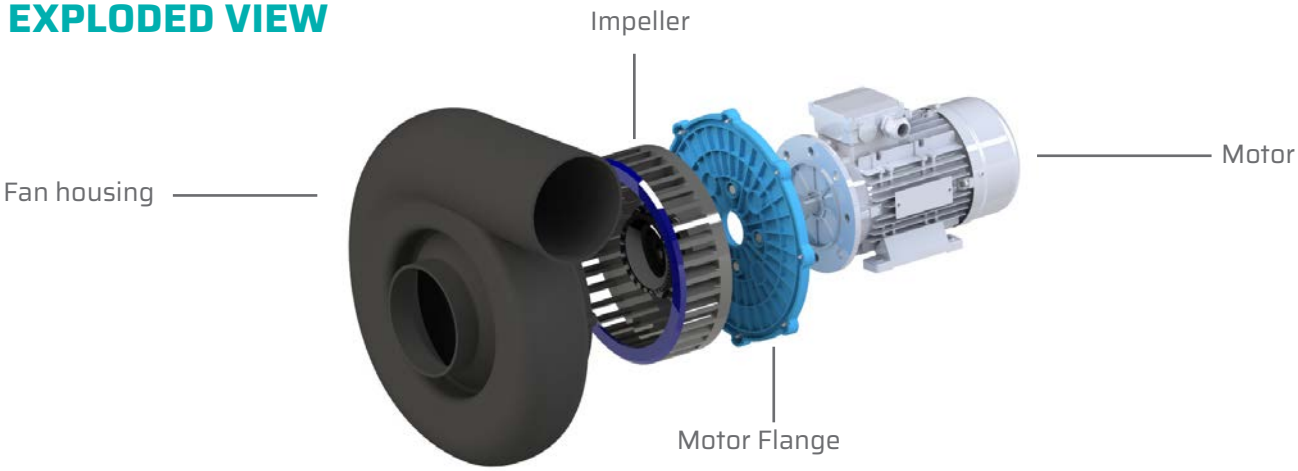

STORM SERIES
STORM 10

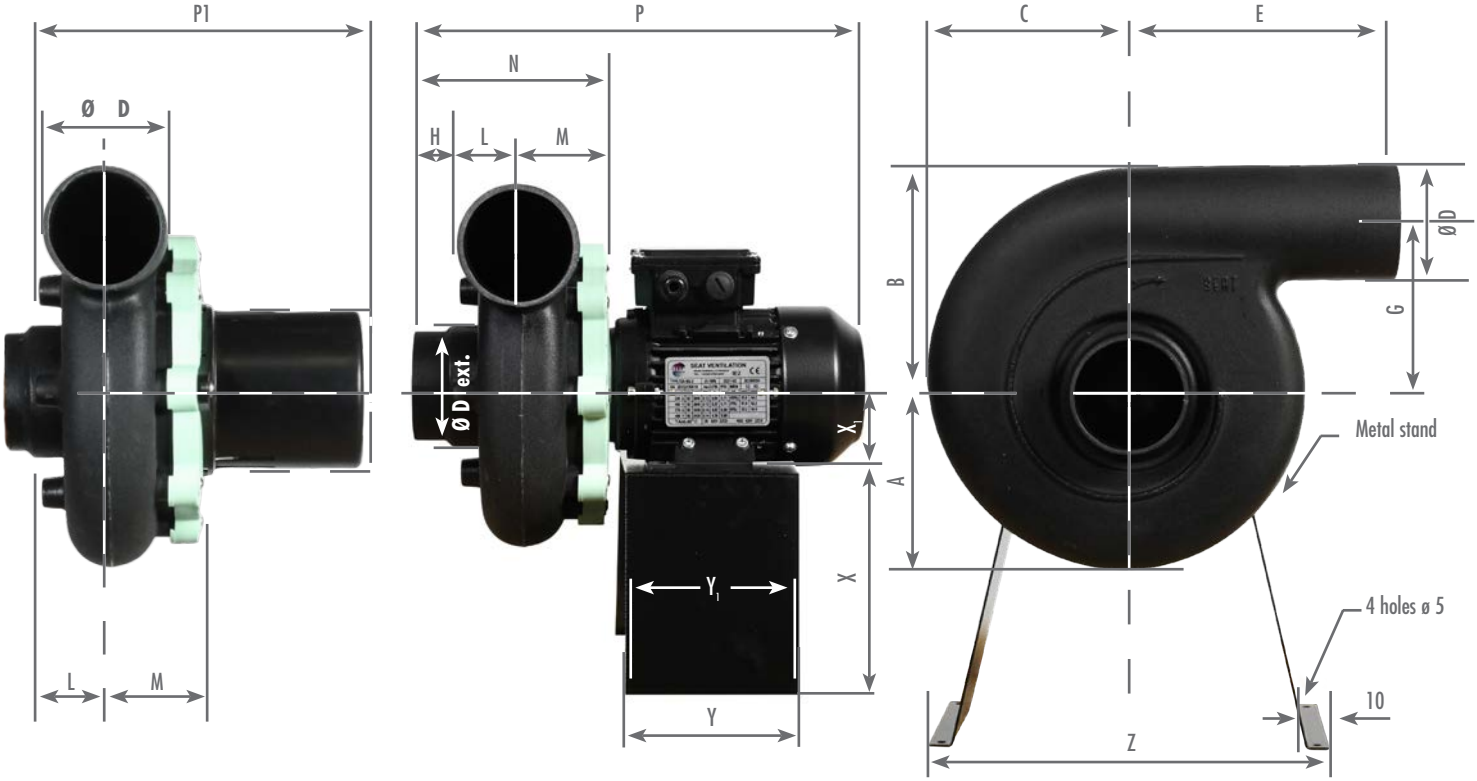

EXTERNAL ROTOR MOTOR VERSION

Available in Ex

Dimension (mm) - Metal stand not included (see accessories) Motor axis heights may vary according to the type of motor used													
A	B	C	ØD	E	G	H	L	M	N	Y	Y_1	Z	X
115	135	127	75	158	97	32	48	57	137	120	100	165	135
According to motor type												P1	P
Mono, external rotor, IP 20 with cover												173	205
ATEX Three-phase												262	295
Three-phase, IP55												253	285
ONLY LG POSITION 315, 0, 90 ET 135													

Left Rotation (Counter-Clockwise) for Storm 10 with metal stand

LG 180 LG 225 LG 270 LG 315 LG 0 LG 45 LG 90 LG 135

NOISE LEVELS

Acoustic (dB)					Frequency Octave (Hz)							
Speed (T/min)	Qv (m^3/h)	Sp (Pa)	LwA dB(A)	LpA* dB(A)	63	125	250	500	1000	2000	4000	8000
1540	80	79	67	46	82	79	72	61	59	47	40	34
2870	157	308	81	61	97	94	86	76	74	62	55	49

*Acoustic pressure Lp at 3 meters - Outlet acoustic data available on request.

STORM SERIES - **STORM 10**

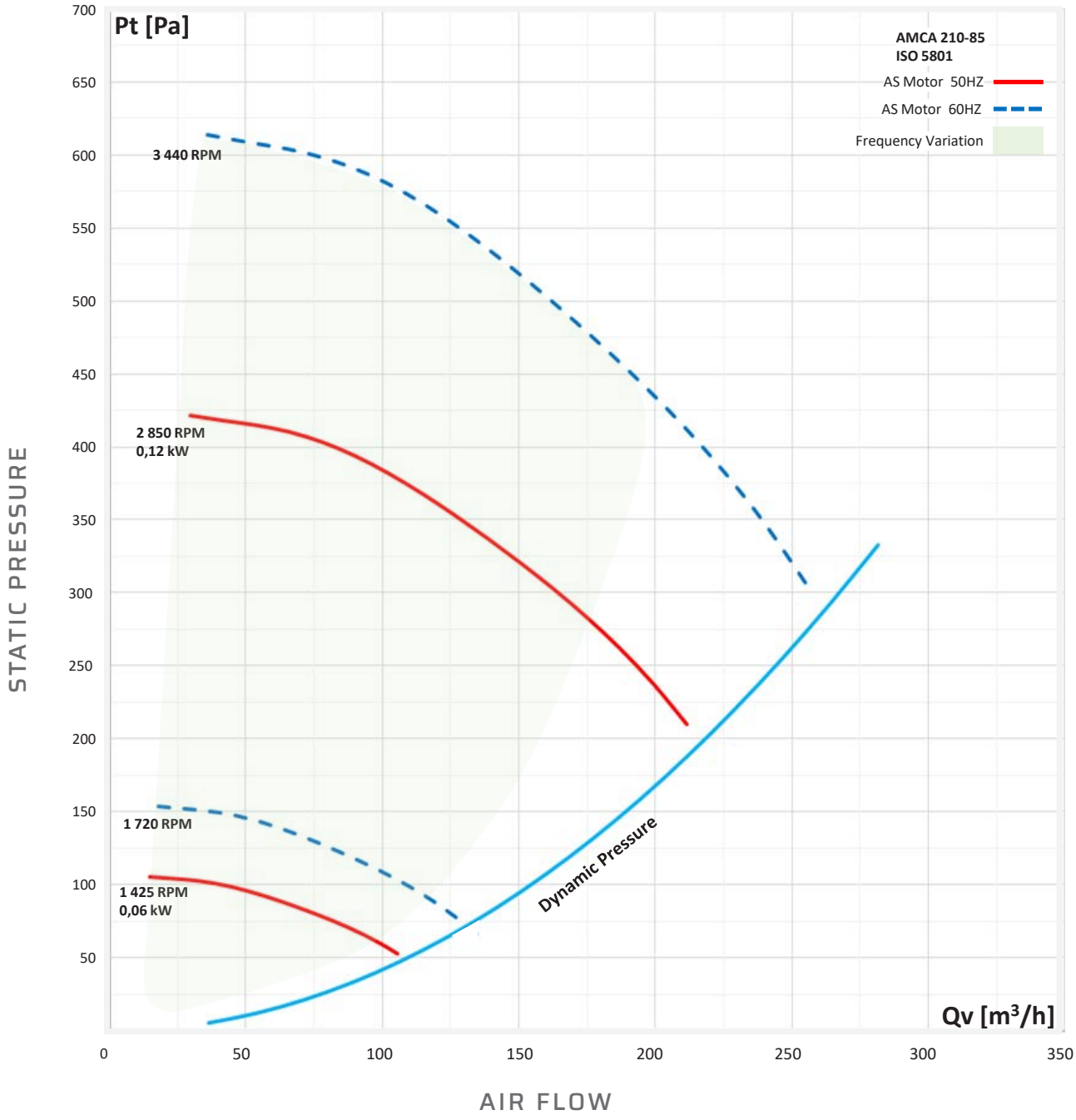

ELECTRICAL FEATURES

Motor	Power (kW)	Motor RPM	Voltage (V)	Intensity (A)	Weight (kg)	Reference Number
IP55 Asynchronous Single-Phase	0,06 (rotor extérieur)	1200	230	0,31	2,75	61102010RE
	0,09	1450	230	0,84	4,17	61102010
	0,12	2870	230	0,95	3,8	61103010
IP55 Asynchronous Three-Phase	0,09	1450	230/400	0,79/0,45	4,17	61102000
	0,12	2870	230/400	0,63/0,36	4,17	61103000
IP55 Asynchronous Three-Phase ATEX	0,06	1450	230/400	0,59/0,34	6	61102003
	0,09	2870	230/400	0,69/0,04	6,2	61103003

Mandatory PTC Sensor for ATEX motor with Frequency Inverter.

STORM SERIES
STORM 12

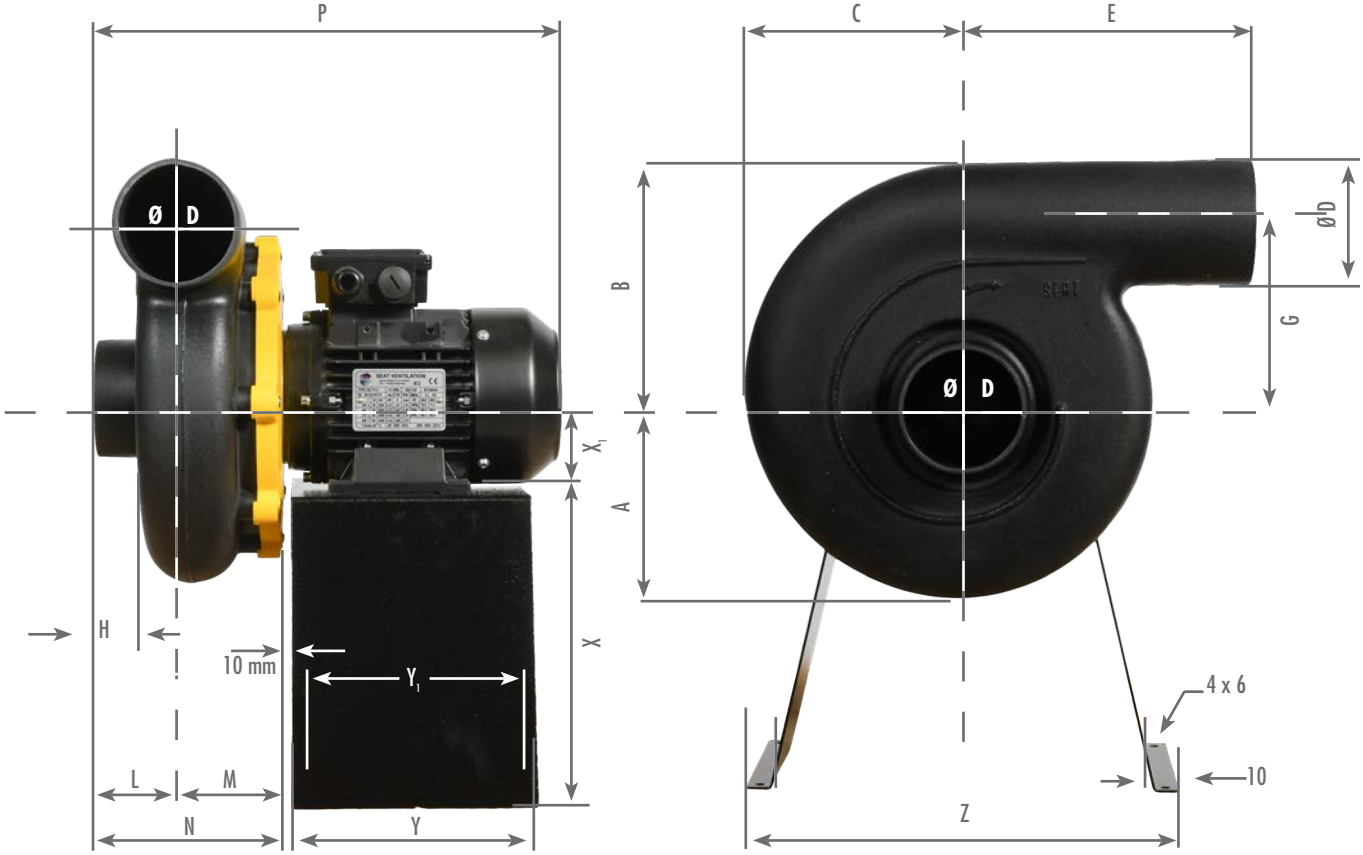

ONLY LG POSITION

Available in Ex

Dimension (mm) - Metal stand not included (see accessories) Motor axis heights may vary according to the type of motor used															
A	B	C	ØD	E	G	H	L	M	N	P	Y	Y_1	Z	X	X_1
145	175	163	90	212	130	45	80	72	152	350	180	160	340	240	71

Left Rotation (Counter-Clockwise)

LG 180 LG 225 LG 270 LG 315 LG 0 LG 45 LG 90 LG 135

NOISE LEVELS

Acoustic (dB)					Frequency Octave (Hz)							
Speed (T/min)	Qv (m^3/h)	Sp (Pa)	LwA dB(A)	LpA* dB(A)	63	125	250	500	1000	2000	4000	8000
1450	175	167	71	51	86	80	69	69	68	57	50	43
2870	346	652	86	65	101	95	84	83	83	72	65	58

*Acoustic pressure Lp at 3 meters - Outlet acoustic data available on request.

STORM SERIES - **STORM 12**

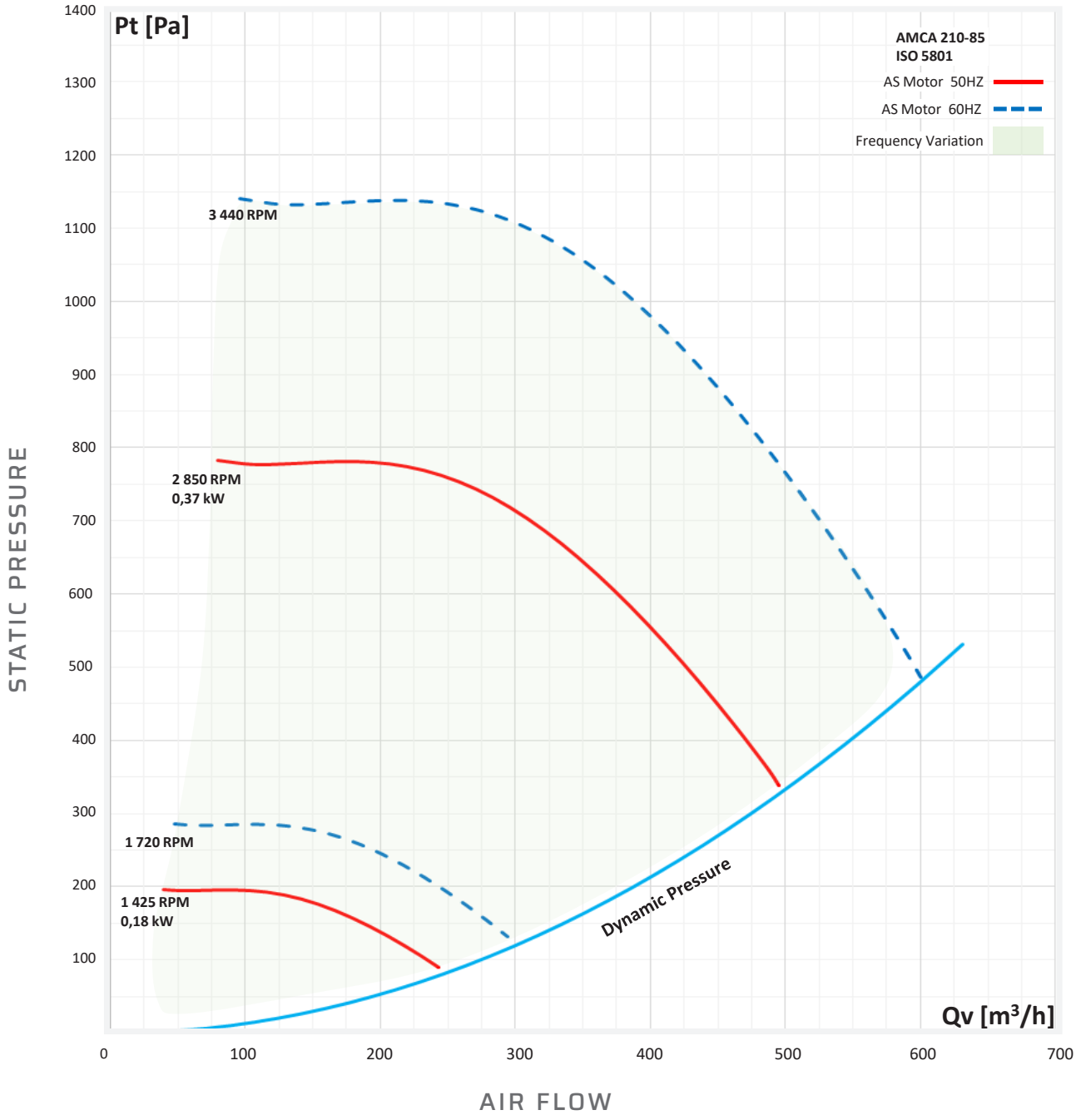

ELECTRICAL FEATURES

Motor	Power (kW)	Motor RPM	Voltage (V)	Intensity (A)	Weight (kg)	Reference Number
IP55 Asynchronous Single-Phase	0,18	1450	230	1,4	7,84	61122010
	0,37	2870	230	2,52	7,54	61123010
IP55 Asynchronous Three-Phase	0,18	1450	230/400	1,09/0,63	7,5	61122000
	0,37	2870	230/400	1,64/0,94	7,54	61123000
IP55 Asynchronous Three-Phase ATEX	0,18	1450	230/400	1,13/0,65	12	61122003
	0,37	2870	230/400	2,1/1,2	9,75	61123003

Mandatory PTC Sensor for ATEX motor with Frequency Inverter.

STORM SERIES
STORM 14

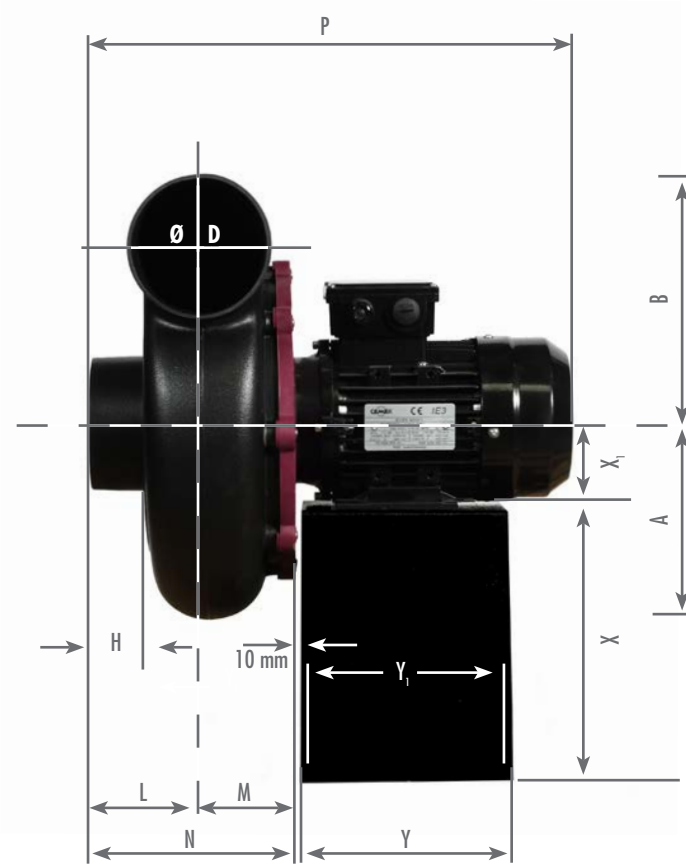

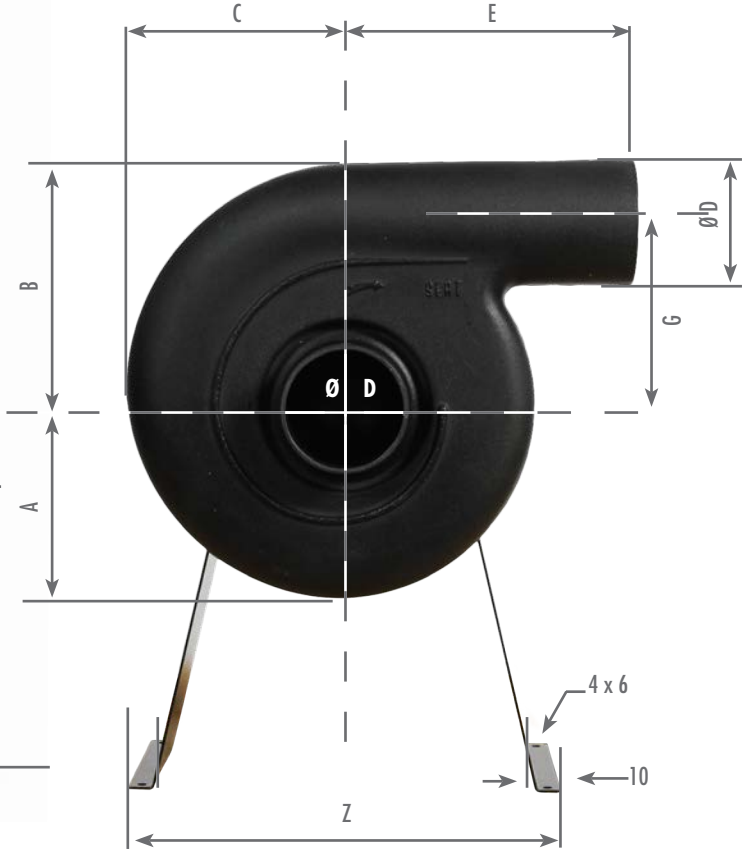

ONLY LG POSITION

Available in Ex

Dimension (mm) - Metal stand not included (see accessories) Motor axis heights may vary according to the type of motor used															
A	B	C	ØD	E	G	H	L	M	N	P	Y	Y_1	Z	X	X_1
188	232	227	125	218	170	55	110	83	193	433	180	160	340	240	80

Left Rotation (Counter-Clockwise)

LG 180 | LG 225 | LG 270 | LG 315 | LG 0 | LG 45 | LG 90 | LG 135

NOISE LEVELS

Acoustic (dB)					Frequency Octave (Hz)							
Speed (T/min)	Qv (m^3/h)	Sp (Pa)	LwA dB(A)	LpA* dB(A)	63	125	250	500	1000	2000	4000	8000
1725	468	418	79	59	93	84	83	76	73	66	68	56
2870	780	1155	90	70	104	95	94	87	84	77	79	67

*Acoustic pressure Lp at 3 meters - Outlet acoustic data available on request.

STORM SERIES - **STORM 14**

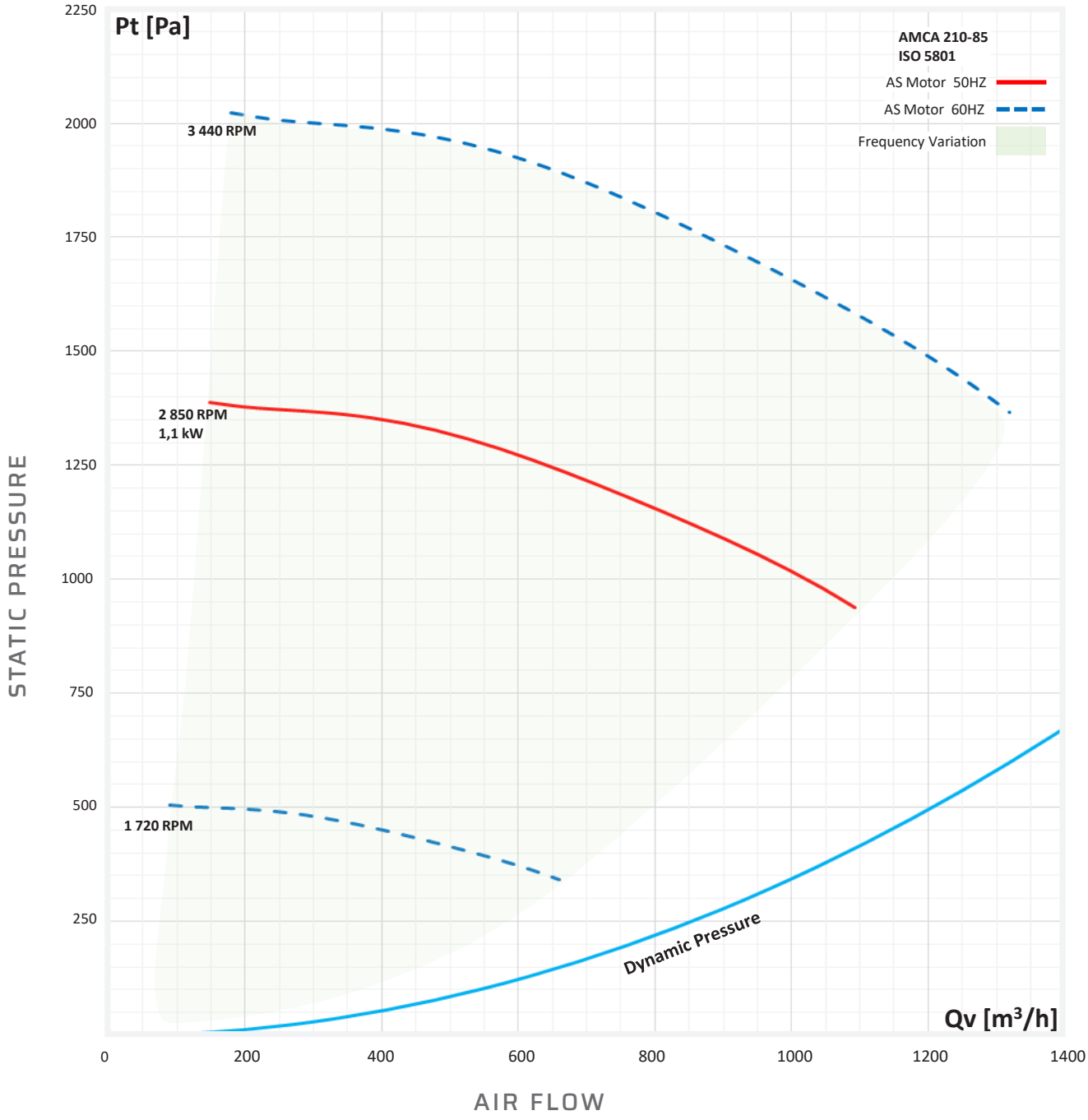

ELECTRICAL FEATURES

Motor	Power (kW)	Motor RPM	Voltage (V)	Intensity (A)	Weight (kg)	Reference Number
IP55 Asynchronous Single-Phase	1,1	2870	230	6,52	13,73	61143010
IP55 Asynchronous Three-Phase	1,1	2870	230/400	4,02/2,31	13,3	61143000
IP55 Asynchronous Three-Phase ATEX	1,1	2870	230/400	4,5/2,6	13,2	61143003

Mandatory PTC Sensor for ATEX motor with Frequency Inverter.

STORM SERIES
STORM 16

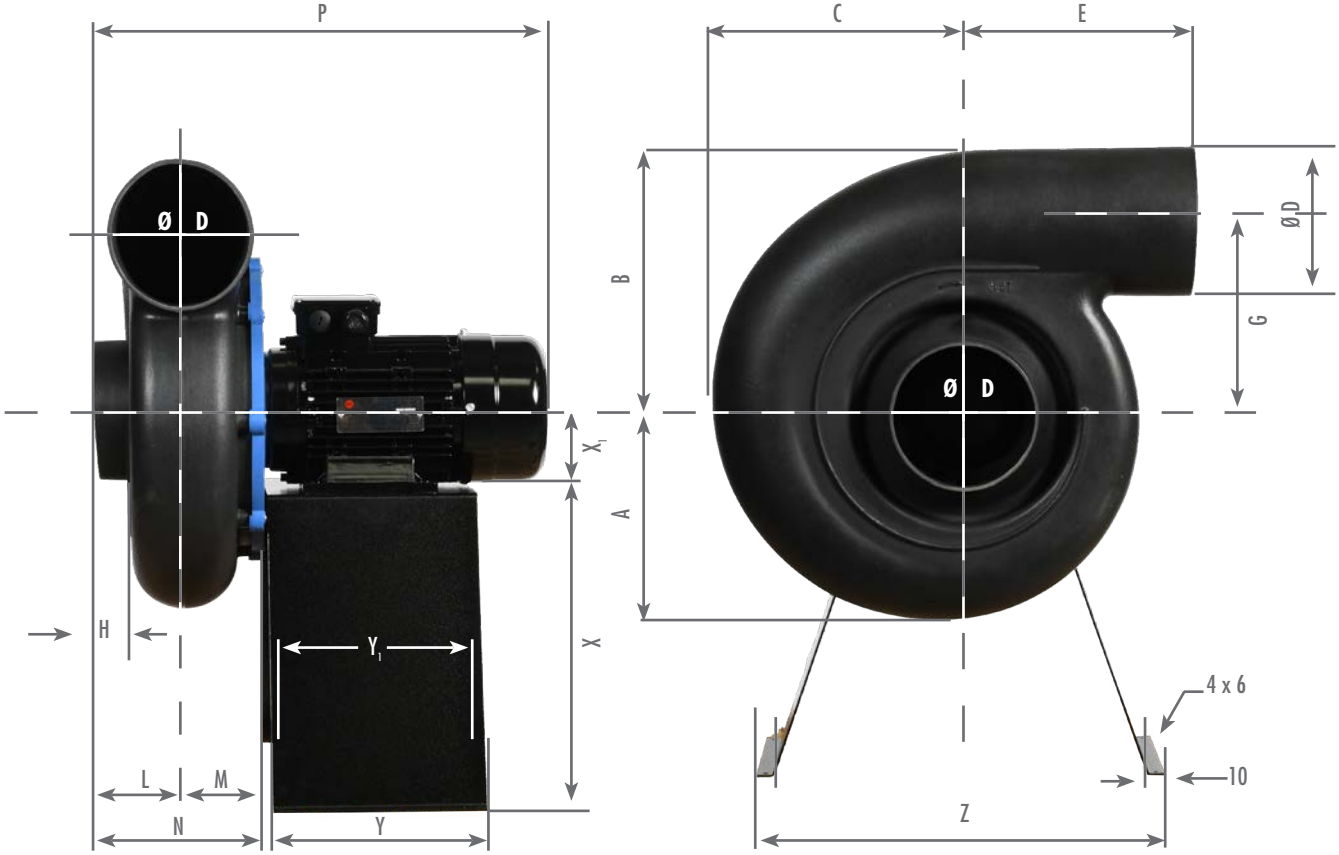

ONLY LG POSITION

Available in Ex

Dimension (mm) - Metal stand not included (see accessories) Motor axis heights may vary according to the type of motor used															
A	B	C	ØD	E	G	H	L	M	N	P	Y	Y_1	Z	X	X_1
235	288	278	160	262	205	40	100	97	197	477	240	160	420	300	90

Left Rotation (Counter-Clockwise)

LG 180 LG 225 LG 270 LG 315 LG 0 LG 45 LG 90 LG 135

NOISE LEVELS

Acoustic (dB)					Frequency Octave (Hz)							
Speed (T/min)	Qv (m^3/h)	Sp (Pa)	LwA dB(A)	LpA* dB(A)	63	125	250	500	1000	2000	4000	8000
1725	514	711	82	62	95	86	83	78	76	73	69	66
2870	855	1970	93	73	106	97	94	89	87	84	80	77

*Acoustic pressure Lp at 3 meters - Outlet acoustic data available on request.

STORM SERIES - **STORM 16**

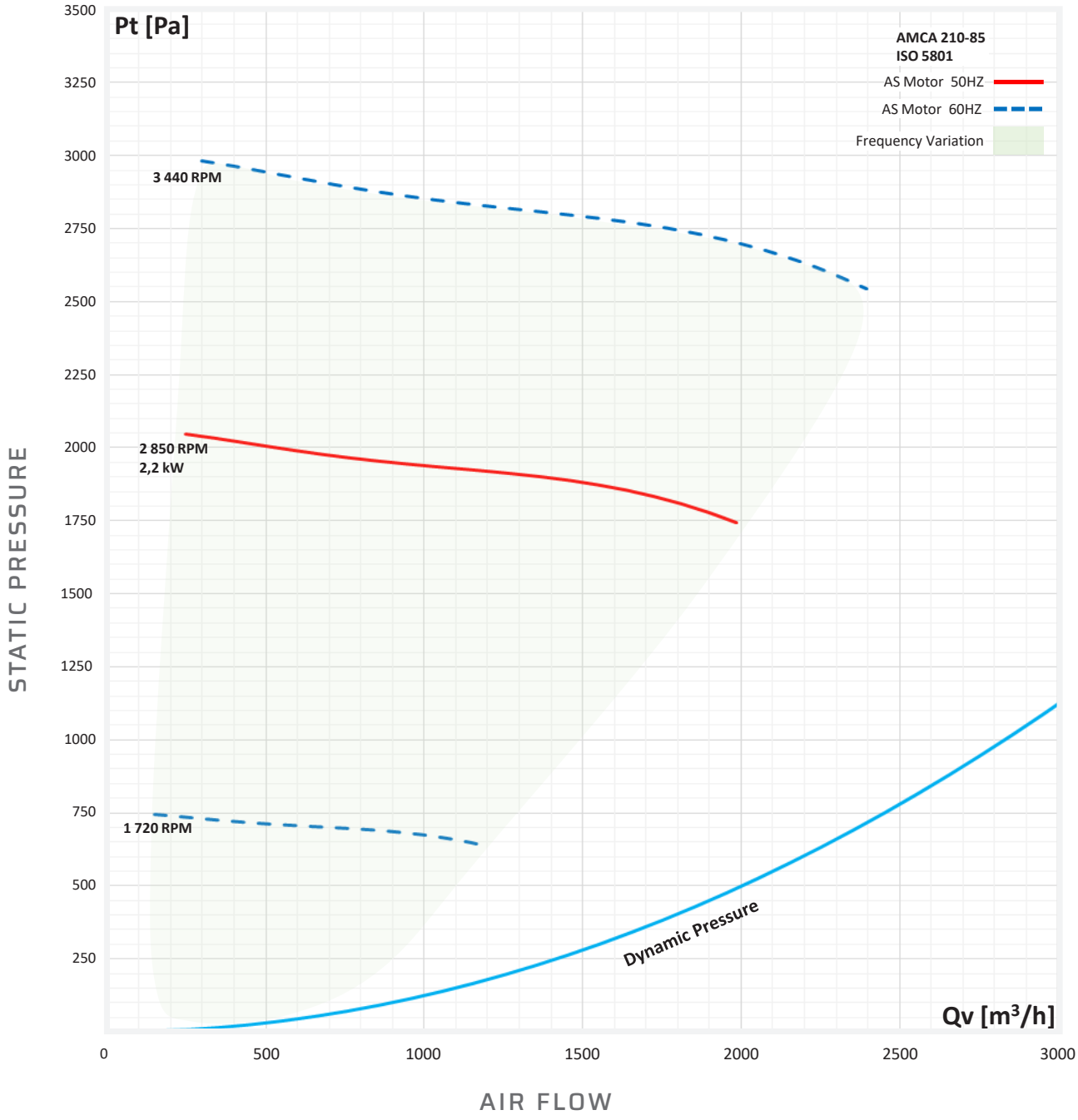

ELECTRICAL FEATURES

Motor	Power (kW)	Motor RPM	Voltage (V)	Intensity (A)	Weight (kg)	Reference Number
IP55 Asynchronous Three-Phase	2,2	2870	230/400	7,56/4,35	23,2	61163000
IP55 Asynchronous Three-Phase ATEX	2,2	2870	230/400	8,7/5	20,2	61163003

Mandatory PTC Sensor for ATEX motor with Frequency Inverter.

STORM SERIES
STORM 18

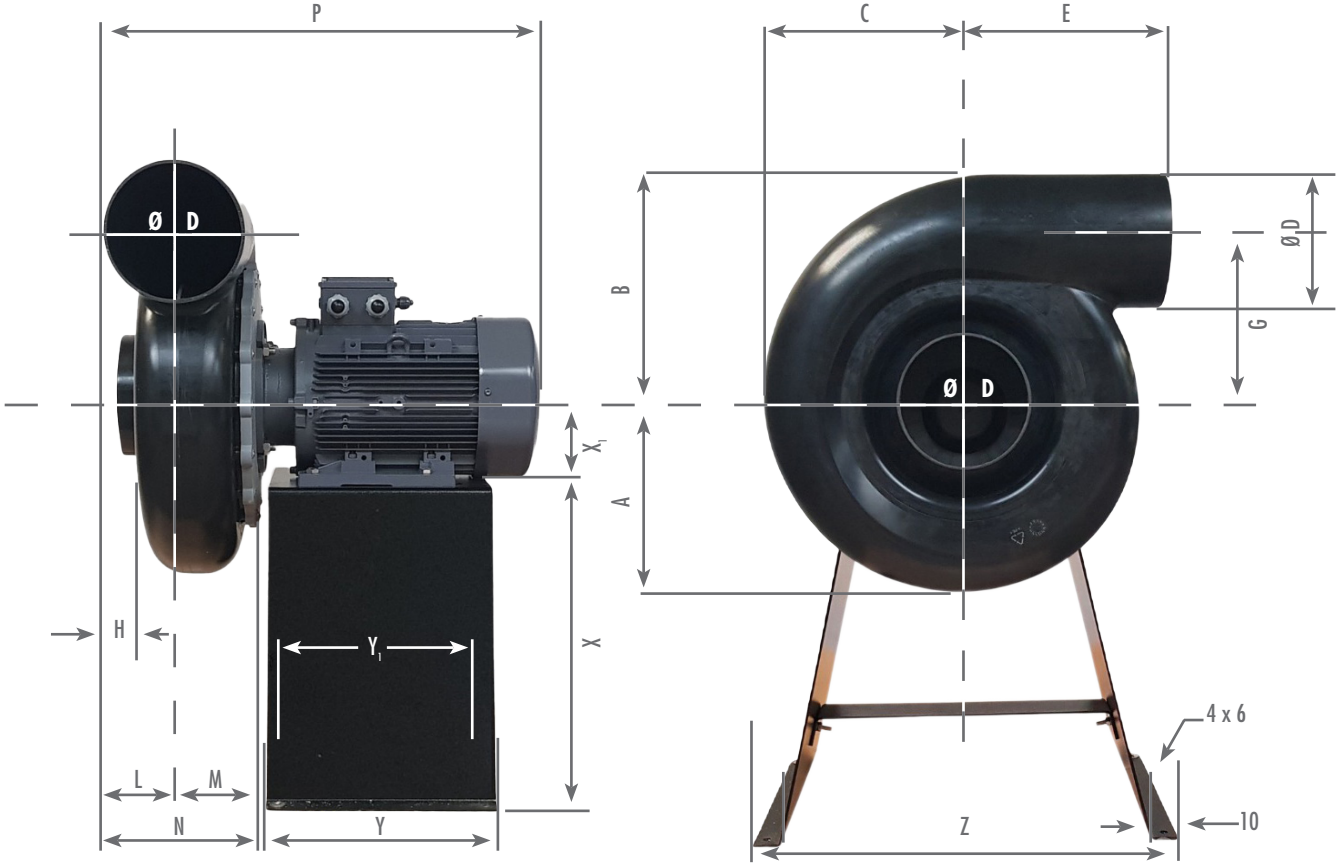

ONLY LG POSITION

Available in Ex

Dimension (mm) - Metal stand not included (see accessories) Motor axis heights may vary according to the type of motor used															
A	B	C	ØD	E	G	H	L	M	N	P	Y	Y_1	Z	X	X_1
291	350	338	200	280	250	40	110	100	220	680	350	310	590	470	132

Left Rotation (Counter-Clockwise)

LG 180 LG 225 LG 270 LG 315 LG 0 LG 45 LG 90 LG 135

NOISE LEVELS

Acoustic (dB)					Frequency Octave (Hz)							
Speed (T/min)	Qv (m^3/h)	Sp (Pa)	LwA dB(A)	LpA* dB(A)	63	125	250	500	1000	2000	4000	8000
2000	2141	1567	89	69	104	92	89	87	83	82	77	71
2870	3073	3227	97	77	112	100	97	95	90	90	85	78

*Acoustic pressure Lp at 3 meters - Outlet acoustic data available on request.

STORM SERIES - **STORM 18**

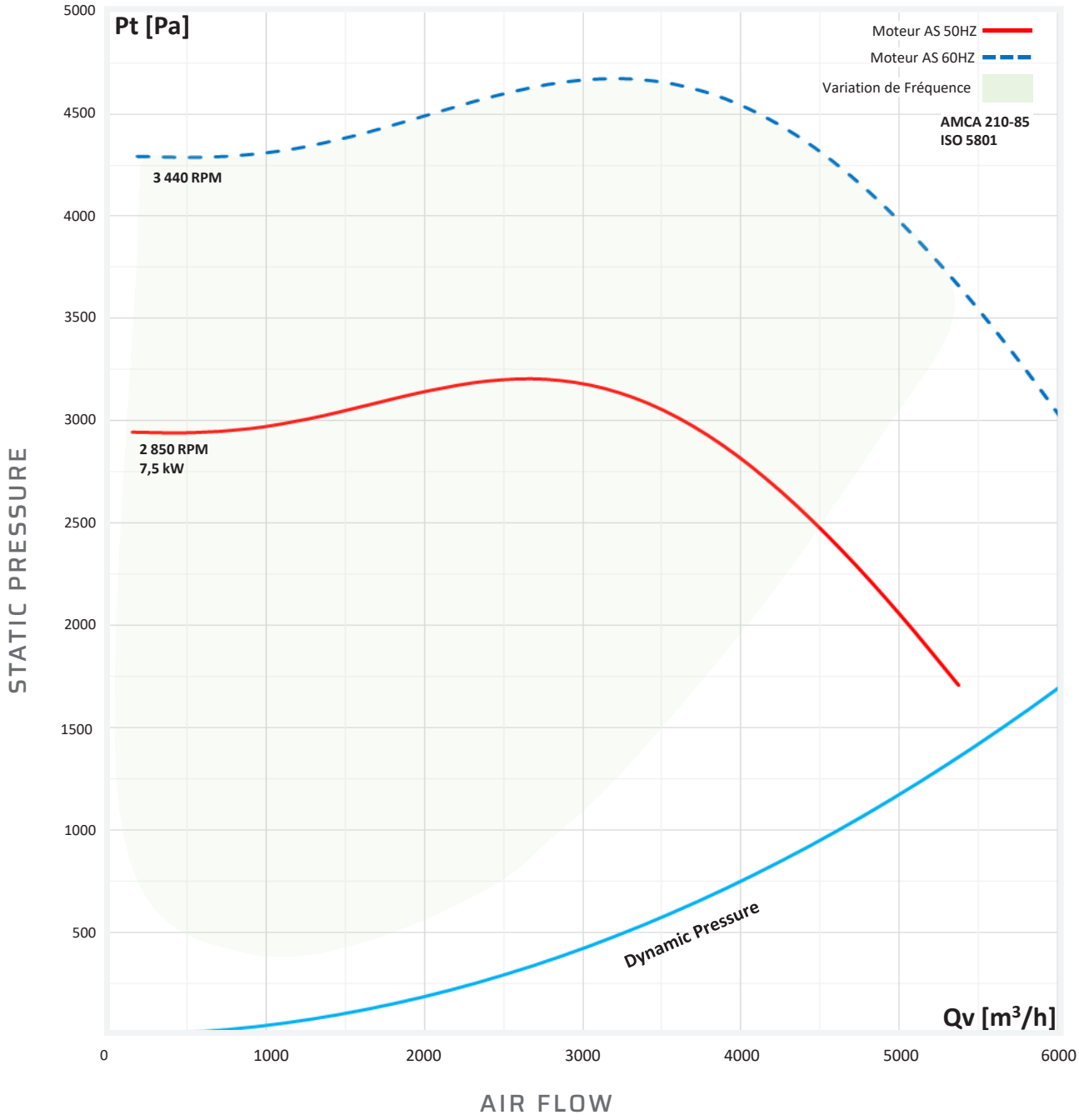

ELECTRICAL FEATURES

Motor	Power (kW)	Motor RPM	Voltage (V)	Intensity (A)	Weight (kg)	Reference Number
IP55 Asynchronous Three-Phase	7,5	2870	400/690	14,3/8,23	70,4	61183000
IP55 Asynchronous Three-Phase ATEX	7,5	2870	400/690	11,94/6,9	77	61183003

Mandatory PTC Sensor for ATEX motor with Frequency Inverter.

JET SERIES
TECHNICAL SPECIFICATIONS

REFERENCE TABLE

Single-Phase Series - Asynchronous

Serie	Motor RPM	Power (kW)	Voltage (V)	Intensity (A)	Weight (kg)	Reference Number
JET 20	1450	0,18	230	1,40	12,75	71202010
	2870	0,75	230	4,80	13,93	71203010
	2800	1,1	230	6,65	11	71203011
JET 25	1450	0,37	230	2,70	14,2	71252010
JET 30	1450	1,1	230	7,23	23,3	71302010

Three-Phase Series - Asynchronous

Serie	Motor RPM	Power (kW)	Voltage (V)	Intensity (A)	Weight (kg)	Reference Number
JET 20	930	0,18	230/400	1,22/0,7	12,4	71201000
	1450	0,18	230/400	1,09/0,63	12,5	71202000
	2870	0,75	230/400	2,85/1,64	15.93	71203000
	2870	1,1	230/400	4,02/2,31	16.93	71203001
JET 25	930	0,18	230/400	1,22/0,7	13,1	71251000
	1450	0,37	230/400	1,85/1,06	13,6	71252000
	1450	0,55	230/400	2,59/1,49	14,7	71252055
	2870	2,2	230/400	7,56/4,35	26,2	71253000
	2870	3	230/400	9,9/5,71	32,2	71253300
JET 30	930	0,55	230/400	2,72/1,57	21,3	71301000
	1450	1,1	230/400	4,32/2,48	23,8	71302000

Three-Phase Series - Atex

Serie	Motor RPM	Power (kW)	Voltage (V)	Intensity (A)	Weight (kg)	Reference Number
JET 20	930	0,18	230/400	1,06/0,61	22,3	71201003
	1450	0,18	230/400	1,13/0,65	12	71202003
	2870	0,75	230/400	3,46/2	16,9	71203003
JET 25	930	0,18	230/400	1,5/0,85	29	71251003
	1450	0,37	230/400	1,94/1,12	14,6	71252003
	2870	2,20	230/400	8,7/5	23,2	71253003
JET 30	1450	1,1	230/400	5,7/3,3	23,3	71302003

EC Series

Serie	Motor RPM	Power (kW)	Voltage (V)	Intensity (A)	Weight (kg)	Reference Number
Single-Phase Motor with Frequency Inverter						
JET 20	1720	0,45	360/460	2,7	6,8	72202010
	2100	0,45	360/460	2,7	6,8	72203010
JET 25	1720	0,45	220/277	2,5	9,8	72252010
JET 30	1720	1	220/277	12	11,2	72302010

JET SERIES

The JET Family, designed for up-blast discharge, offers a fully enclosed blower system. The direct drive up-blast centrifugal blower system is resistant to chemicals and corrosive vapors. The blower systems are also available in CIP (Carbon Impregnated Polypropylene) for explosive atmospheres.
Performance ranges from 200 to 3500 (pa) static pressure and 80 to 1400 CMH flow.
Installation package with integrated watertight hood, featuring built-in drain holes and disconnect switch. The JET blower system is generally roof-mounted on curb base.
Applications for the JET blower system include Water Parks, Laboratory Fume Hoods, and other various applications. The Jet family is manufactured in recyclable, UV-resistant polypropylene to ISO 9001-2008 standards.

JET 20

Flow rate:
400-1600 m³/h
300 to 800 CFM
P max : **1100 Pa**

JET 25

Flow rate:
500-3500 m³/h
425 to 1000 CFM
P max : **2000 Pa**

JET 30

Flow rate:
900-3500 m³/h
1000 to 1800 CFM
P max : **800 Pa**

Asynchronous motor, single-phase or three-phase type B34, with IP55 protection. Motor class IE3 rated (for power equal to or greater than 0.75kW) and positioned outside of chemical latent airflow.

Optional ATEX Series: Class IE3 rated ATEX Zone 2 Category 3 GAS CT4, explosion resistant Asynchronous motor.

Optional EC Motor Series: Simple to install electronically communicated synchronous motor. EC motors provide energy savings and increased airflow performance. Available in IP65 protection rating for single- phase motors and IP55 protection rating for three-phase motors.

Motor Support Plates and Inlet Flanges supported by high grade Stainless-Steel hardware and high strength elastomeric O-rings.

Optional CIP (Carbon Impregnated Polypropylene) anti-static Motor Support Plates and Inlet Flanges.

Forward curved centrifugal type impeller made of injection molded PPH. Fan wheel supplied with hub cap constructed of PPH. Wheels electronically and dynamically balanced to ISO 1940.

Optional CIP (Carbon Impregnated Polypropylene) anti-static infused Impeller.

Polypropylene end hub cap for vapor and gas tight motor shaft end and hardware seal.

Optional CIP (Carbon Impregnated Polypropylene) anti-static end hub cap.

Plastic parts: built in UV-Resistant Polypropylene.

Optional CIP (Carbon Impregnated Polypropylene) anti-static Fan Housing.

All our models are also available in ATEX versions

EXPLODED VIEW

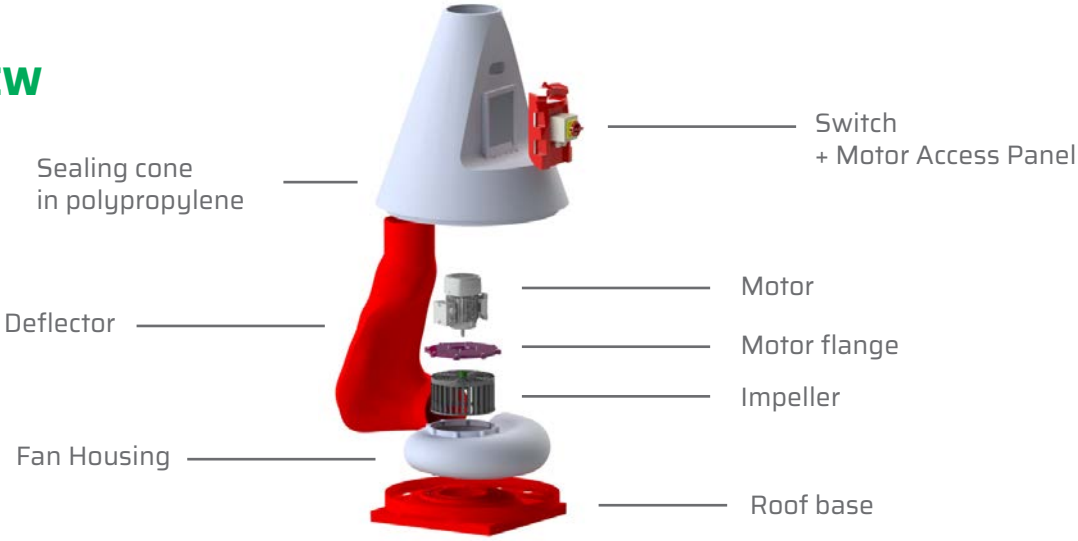

JET SERIES
JET 20

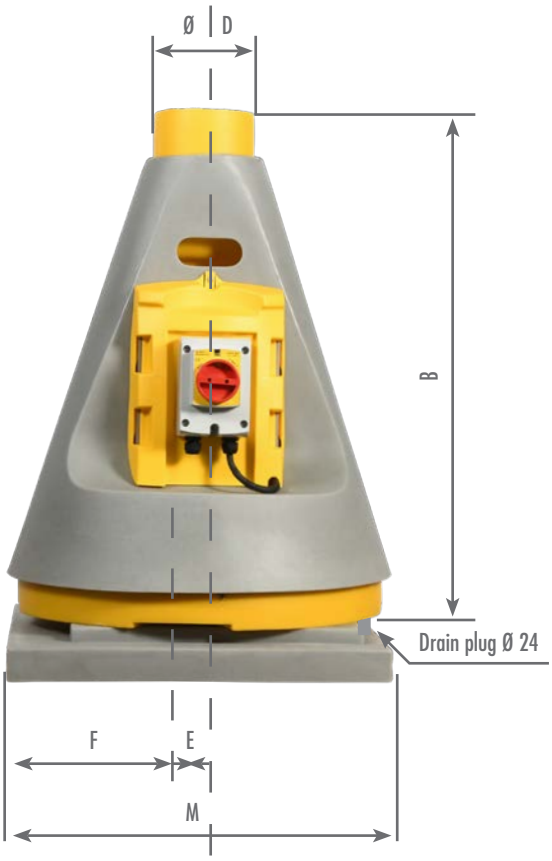

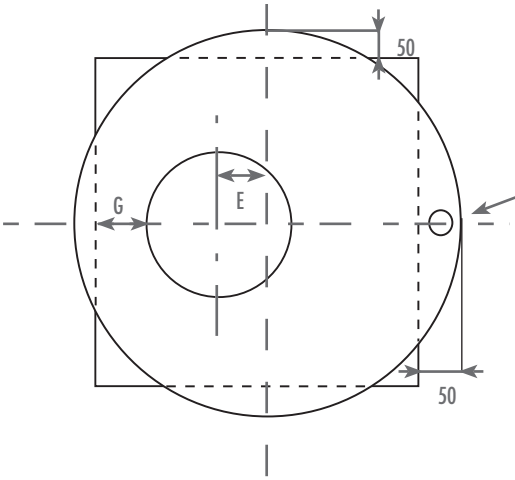

Drain plug

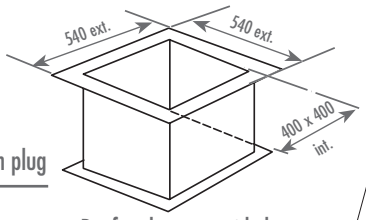

Roof curb not provided

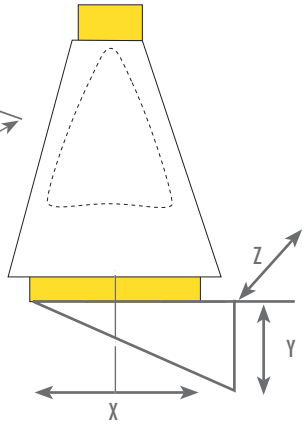

Option : Angle bracket - Wall-mounting

Available in Ex EC

Dimension (mm) - Metal stand not included (see accessories)										
A	B	ØD	E	F	G	H	X	Y	Z	M
600	800	160	50	250	160	70	280	350	400	540-540 mm

NOISE LEVELS

Acoustic (dB)					Frequency Octave (Hz)							
Speed (T/min)	Qv (m^3/h)	Sp (Pa)	LwA dB(A)	LpA* dB(A)	63	125	250	500	1000	2000	4000	8000
1450	470	190	66	45	61	67	66	63	61	55	52	45
2870	925	740	80	60	76	81	80	78	75	69	67	60

*Acoustic pressure Lp at 3 meters - Outlet acoustic data available on request.

JET SERIES - JET 20

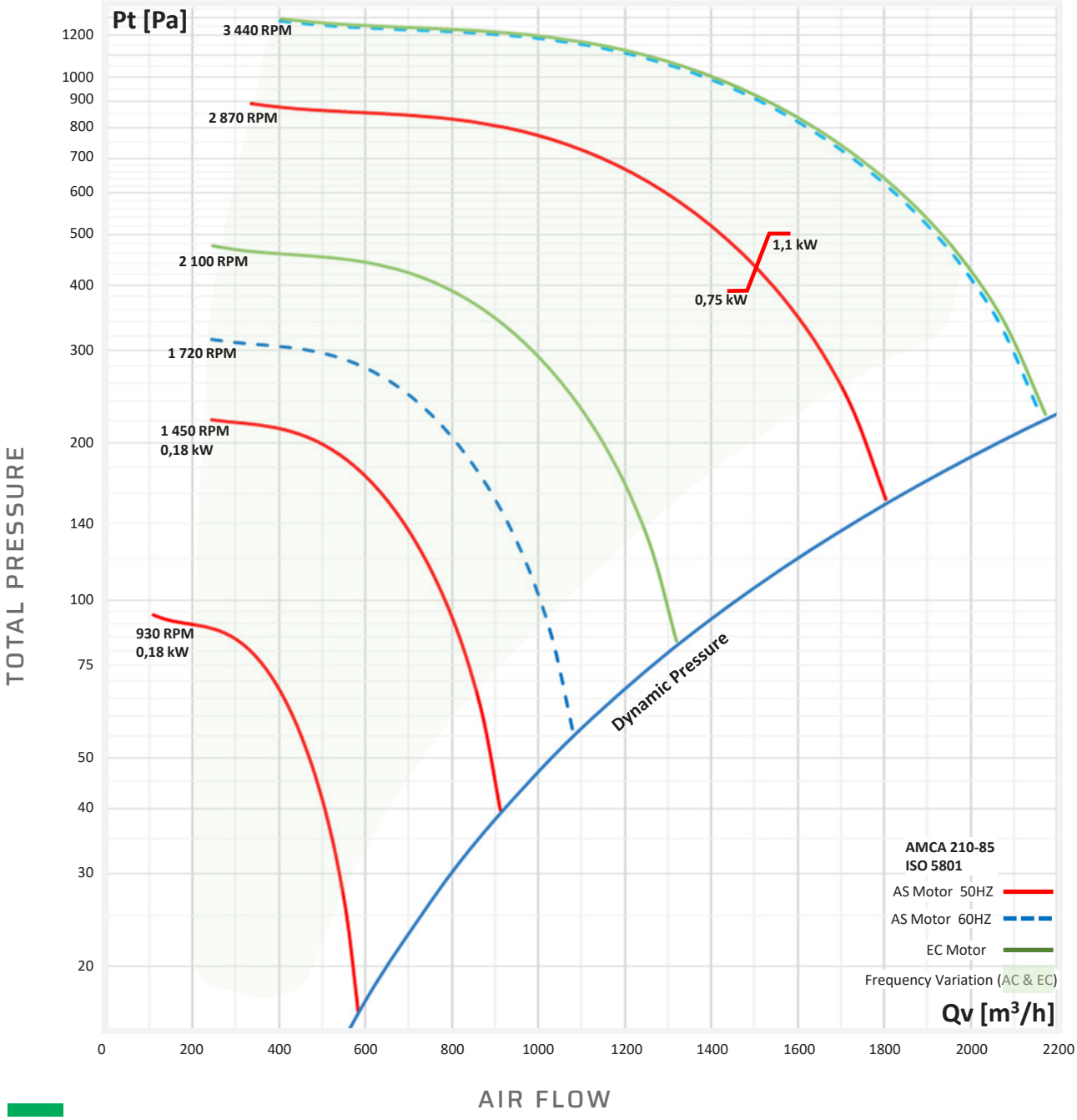

ELECTRICAL FEATURES

Motor	Power (kW)	Motor RPM	Voltage (V)	Intensity (A)	Weight (kg)	Reference Number
IP55 Asynchronous Single-Phase	0,18	1450	230	1,4	12,75	71202010
	0,75	2870	230	4,8	13,93	71203010
IP65 EC Single-Phase	0,45	1720	230	2,7	6,8	72202010
	0,45	2100	230	2,7	6,8	72203010
IP55 Asynchronous Three-Phase	0,18	930	230/400	1,22/0,7	12,4	71201000
	0,18	1450	230/400	1,09/0,63	12,5	71202000
	0,75	2870	230/400	2,85/1,64	15,93	71203000
	1,1	2870	230/400	4,02/0,07	16,93	71203001
IP55 Asynchronous Three-Phase ATEX Ex	0,18	930	230/400	1,06/0,61	22,3	71201003
	0,18	1450	230/400	1,13/0,65	12	71202003
	0,75	2870	230/400	3,45/2	16,9	71203003
	1,1	2870	230/400	4,33/2,5	12,5	71203006

Mandatory PTC Sensor for ATEX motor with Frequency Inverter.

JET SERIES
JET 25

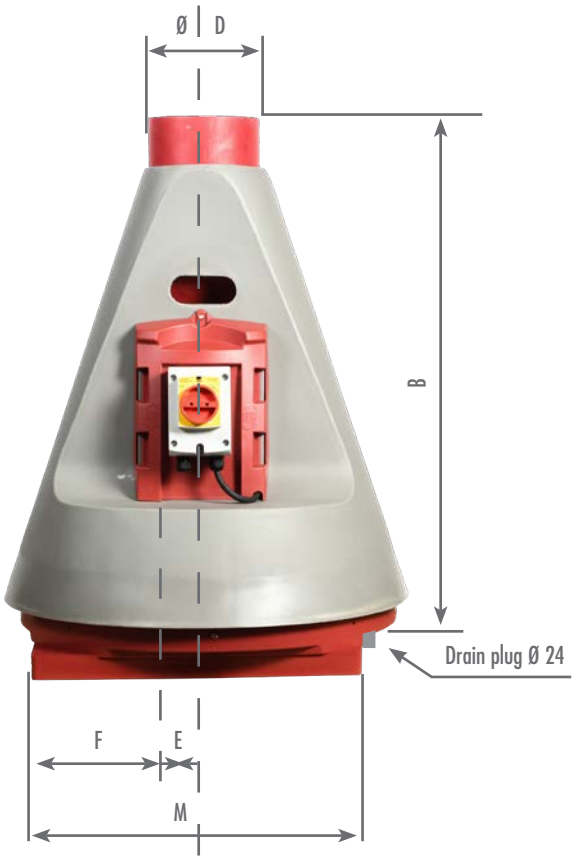

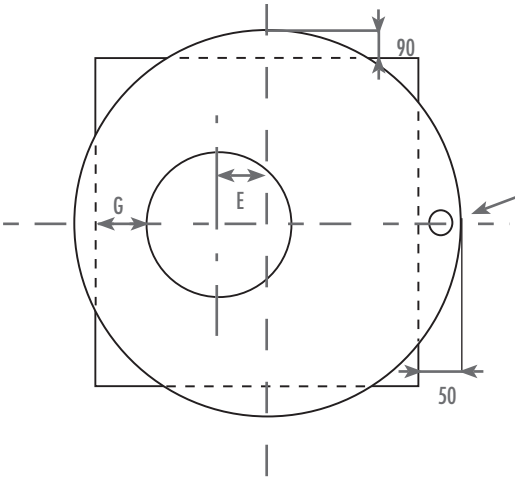

Drain plug

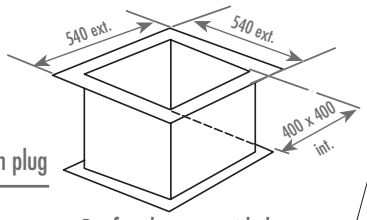

Roof curb not provided

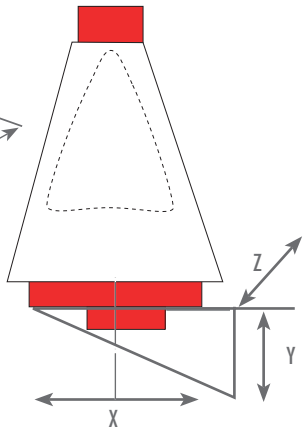

Option : Angle bracket - Wall-mounting

Available in

Dimension (mm) - Metal stand not included (see accessories)											
A	B	ØD	E	F	G	H	I	X	Y	Z	M
735	900	200	60	240	145	25	55	330	350	510	540-540 mm

NOISE LEVELS

Acoustic (dB)					Frequency Octave (Hz)							
Speed (T/min)	Qv (m^3/h)	Sp (Pa)	LwA dB(A)	LpA* dB(A)	63	125	250	500	1000	2000	4000	8000
1450	647	325	72	51	71	75	71	69	67	63	59	55
2870	1280	1273	87	66	86	90	86	84	82	77	73	70

*Acoustic pressure Lp at 3 meters - Outlet acoustic data available on request.

JET SERIES - **JET 25**

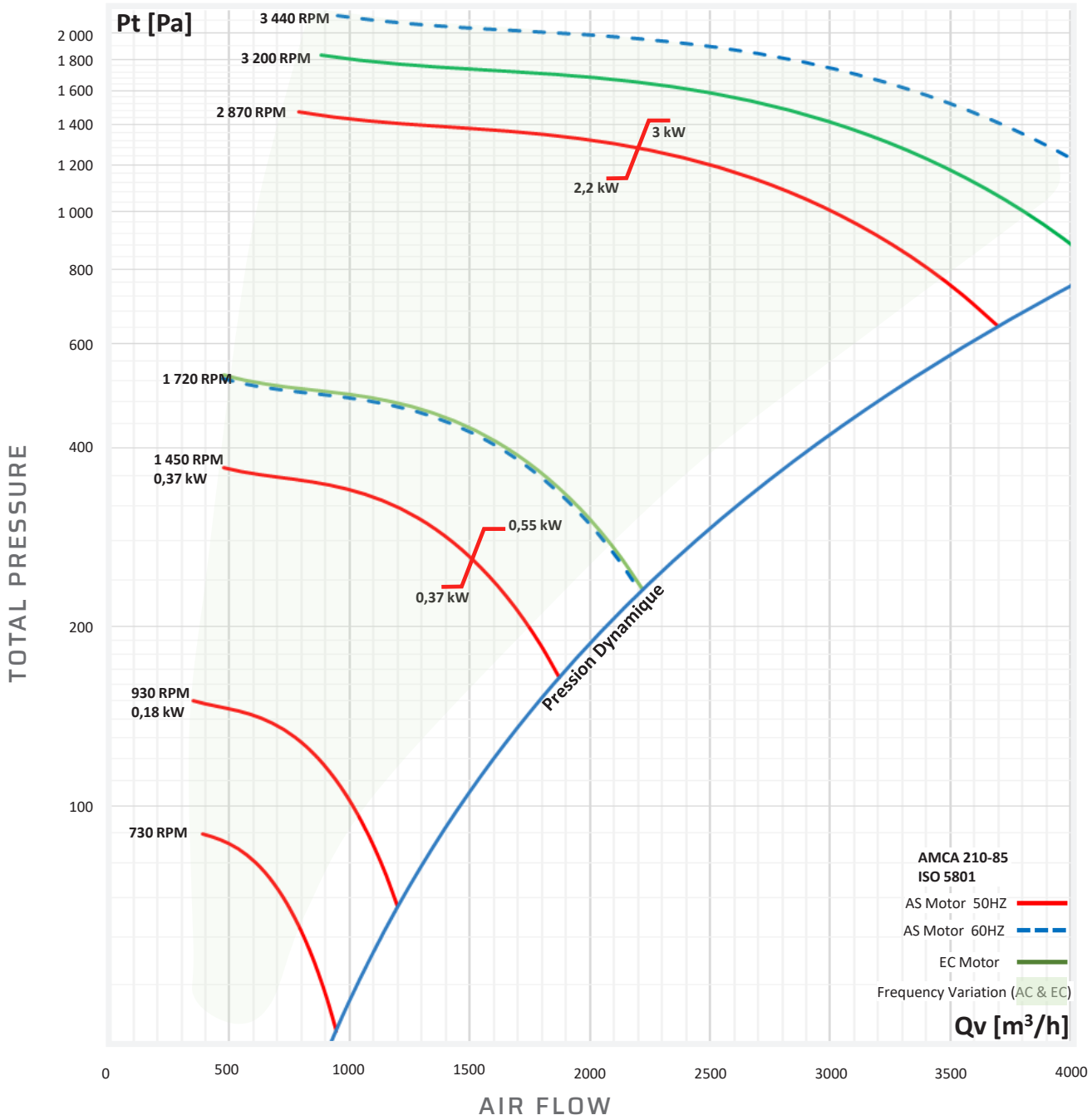

ELECTRICAL FEATURES

Motor	Power (kW)	Motor RPM	Voltage (V)	Intensity (A)	Weight (kg)	Reference Number
IP55 Asynchronous Single-Phase	0,37	1450	230	2,7	14,2	71252010
IP65 EC Single-Phase	0,45	1720	220/277	2,5	9,8	72252010
IP55 Asynchronous Three-Phase	0,18	930	230/400	1,85/1,06	13,1	71251000
	0,37	1450	230/400	2,59/1,49	13,6	71252000
	0,55	1450	230/400	7,56/4,35	14,7	71252055
	2,2	2870	230/400	9,9/4,35	26,4	71253000
	3	2870	230/400	9,9/5,1	32,2	71253300
IP55 Asynchronous Three-Phase ATEX Ex	0,18	930	230/400	1,5/0,85	29	71251003
	0,37	1450	230/400	1,94/1,12	14,6	71252003
	2,2	2870	230/400	8,7/5	23,2	71253003

Mandatory PTC Sensor for ATEX motor with Frequency Inverter.

JET SERIES
JET 30

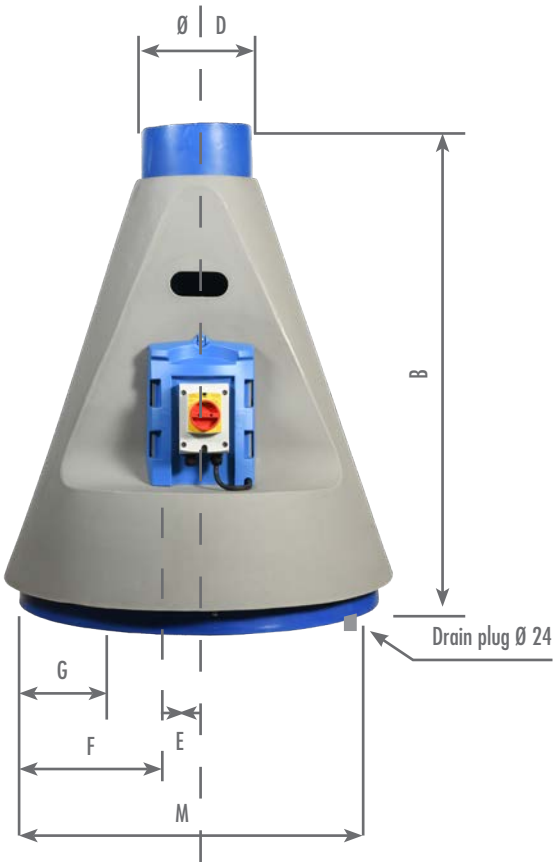

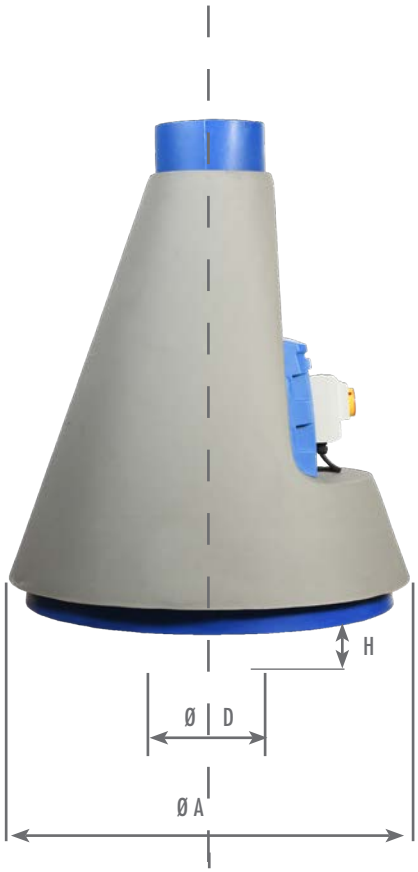

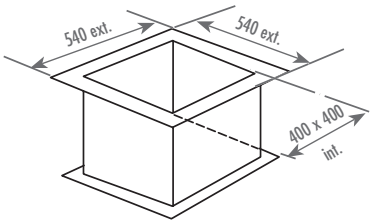

Roof curb not provided

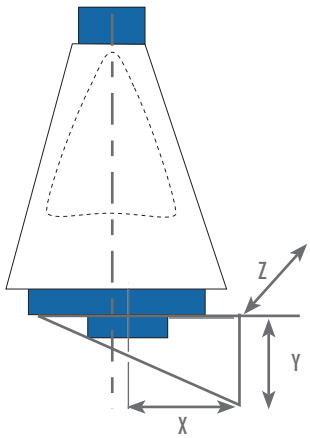

Option : Angle bracket - Wall-mounting

Available in

Dimension (mm) - Metal stand not included (see accessories)											
A	B	ØD	E	F	G	H	G'	X	Y	Z	M
880	1040	250	70	200	75	70	130	400	400	600	540-540 mm

NOISE LEVELS

Acoustic (dB)					Frequency Octave (Hz)							
Speed (T/min)	Qv (m^3/h)	Sp (Pa)	LwA dB(A)	LpA* dB(A)	63	125	250	500	1000	2000	4000	8000
930	1006	185	69	48	67	69	64	65	65	61	57	53
1450	1570	450	78	58	77	78	74	74	74	71	66	63

*Acoustic pressure Lp at 3 meters - Outlet acoustic data available on request.

JET SERIES - **JET 30**

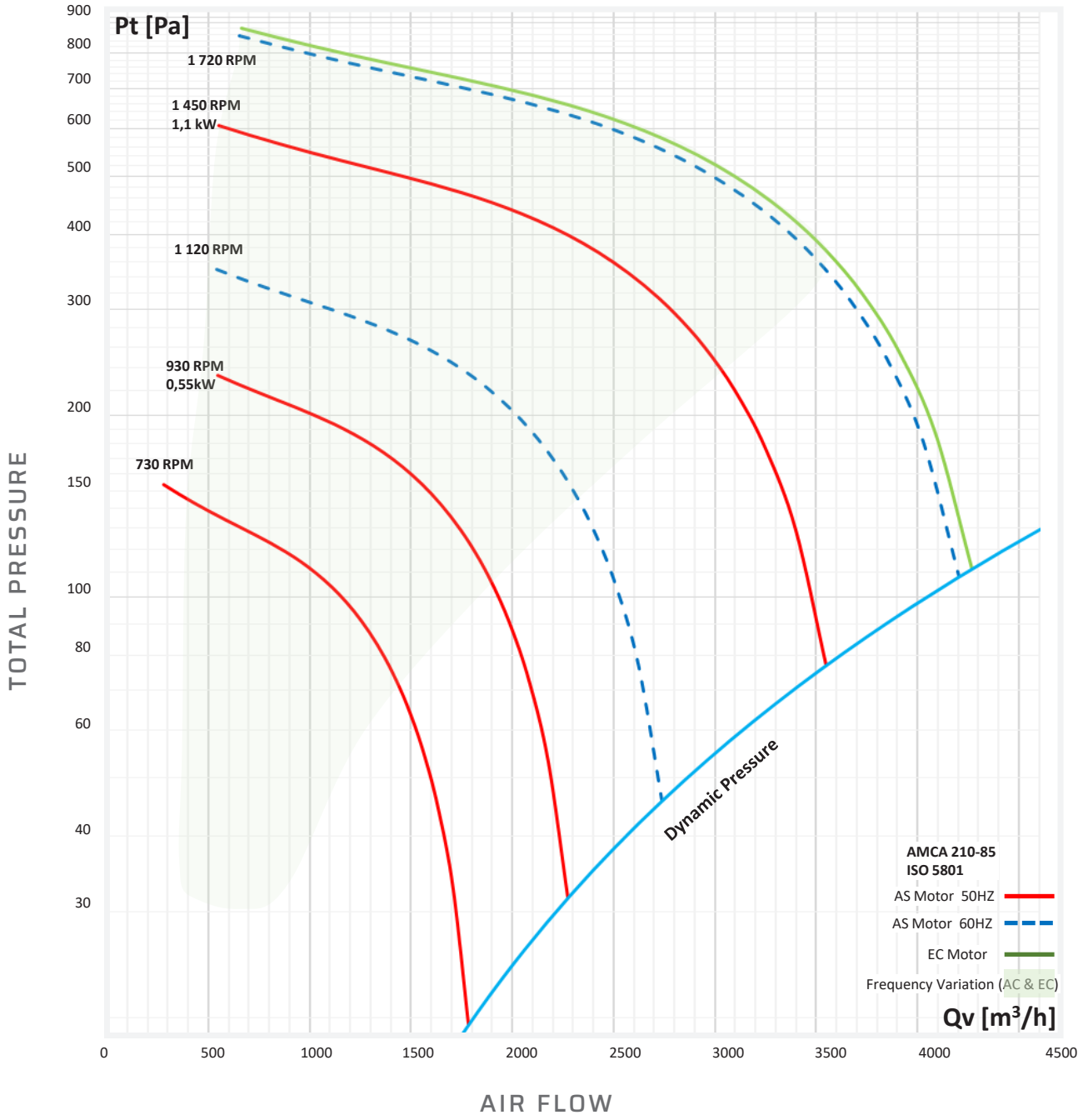

ELECTRICAL FEATURES

Motor	Power (kW)	Motor RPM	Voltage (V)	Intensity (A)	Weight (kg)	Reference Number
IP55 Asynchronous Single-Phase	1,1	1450	230	7,23	23,3	71302010
IP65 EC Single-Phase	1	1720	220/277	12	11,2	72302010
IP55 Asynchronous Three-Phase	0,55	930	230/400	2,72/1,57	21,3	71301000
	1,1	1450	230/400	4,32/2,48	23,8	71302000
IP55 AAsynchronous Three-Phase ATEX Ex	1,1	1450	230/400	5,7/3,3	23,3	71302003

Mandatory PTC Sensor for ATEX motor with Frequency Inverter.

OUR RANGE OF
MOUNTING OPTIONS

STANDARD ROOF UNIT KIT

Specifications

Cap bracket - Motor Cap - Roof curbe bare - Exhaust Guard with or without switch + Reinforcement (for S35 only)
(According to the reference number)

Reference Number with Switch	Reference Number without Switch	Compatibility	Dimensions (mm) A	B	C	D	E	Weight (Kg)
811000	811009	SEAT 15 - 0,18 KW SEAT 15 - 0,37 KW	550	560	560	125	547/547 int.	4,60
811001	811005	SEAT 20 - 0,18 KW SEAT 20 - 0,75 KW SEAT 20 - 1,1 KW	560	600	560	160	547/547 int.	4,80
811002	811006	SEAT 25 - 0,18 KW SEAT 25 - 0,37 KW SEAT 25 -0,55 KW SEAT 25 - 1,5 KW SEAT 25 - 2,2 KW SEAT 25 - 3 KW	590	680	595	200	547/547 int.	4,80
811003	811007	SEAT 30 - 0,55 KW SEAT 30 - 1,1 KW	680	780	650	250	547/547 int.	5,10
811004	811008	SEAT 35 - 2,2 KW SEAT 35 - 4 KW SEAT 35 - 5,5 KW SEAT 35 - 7,5 KW	880	950	850	315	700/700 int.	9,00

ATEX ROOF UNIT KIT

Specifications

Atex Cap Bracket - Atex Motor Cap - Atex Roof Curbe Bare - Atex Exhaust Guard with Switch + Atex Reinforcement (for S35 only)

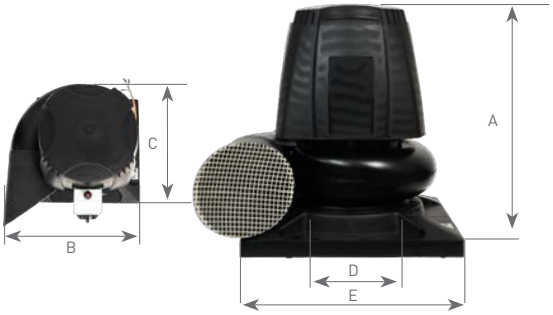

Reference Number	Compatibility	Dimensions (mm) A	B	C	D	E	Weight (Kg)
811009AT	SEAT 15 - 0,18 KW SEAT 15 - 0,37 KW	550	560	560	125	547/547 int.	3,50
811005AT	SEAT 20 - 0,18 KW SEAT 20 - 0,75 KW SEAT 20 - 1,1 KW	560	600	560	160	547/547 int.	5,60
811006AT	SEAT 25 - 0,37 KW SEAT 25 - 1,5 KW SEAT 25 - 2,2 KW SEAT 25 - 3 KW	590	680	595	200	547/547 int.	4,80
811007AT	SEAT 30 - 0,55 KW SEAT 30 - 1,5 KW	680	780	650	250	547/547 int.	5,10
811008AT	SEAT 35 - 2,2 KW SEAT 35 - 5,5 KW SEAT 35 - 7,5 KW	880	950	850	315	700/700 int.	6,00

METAL STAND

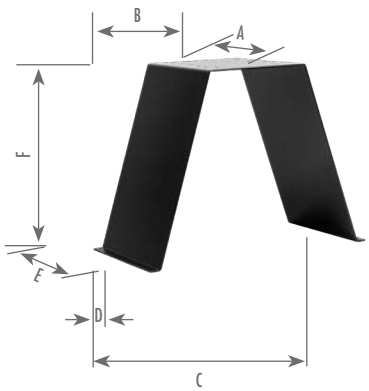

Reference Number	Compatibility	Dimensions (mm) A	B	C	D	E	F	Weight (Kg)
810000	STORM 10 - 0,06 KW STORM 10 - 0,09 KW	140	137	235	20	120	130	1,02
810001	SEAT 15 - 0,18 KW SEAT 15 - 0,37 KW SEAT 20 - 0,18 KW SEAT 20 - 0,75 KW SEAT 20 - 1,1 KW STORM 12 - 0,18 KW STORM 12 - 0,37 KW STORM 14 - 1,1 KW	190	180	320	20	160	240	1,97
810003	SEAT 25 - 0,18 KW SEAT 25 - 0,37 KW SEAT 25 - 0,55 KW	190	180	400	20	160	300	2,40
810005	SEAT 25 - 1,5 KW SEAT 25 - 2,2 KW STORM 16 - 2,2 KW	190	180	400	20	160	300	2,40
810006	SEAT 25 - 3 KW	190	180	400	20	160	300	5,30
810007	SEAT 30 - 0,55 KW SEAT 30 - 1,1 KW	200	240	440	20	220	350	5,43
810008	SEAT 35 - 2,2 KW SEAT 35 - 4 KW SEAT 35 - 5,5 KW SEAT 35 - 7,5 KW STORM 18 - 7,5 KW	300	350	600	20	310	468	16,00
810009	SEAT 50 - 4 KW SEAT 50 - 5,5 KW	297	400	600	50	715	610	30,00

ENCLOSED PEDESTALS

Reference Number	Specification	Compatibility	Type	Dimensions (mm) X	Z	Y	Z1	Y1 Drilling	Weight (Kg)
810450	H 450	SEAT 15 - 0,18 KW SEAT 15 - 0,37 KW SEAT 20 - 0,18 KW SEAT 20 - 0,75 KW SEAT 20 - 1,1 KW SEAT 25 - 0,18 KW SEAT 25 - 0,37 KW SEAT 25 - 0,55 KW STORM 10 - 0,06 KW STORM 10 - 0,09 KW STORM 12 - 0,18 KW STORM 12 - 0,37 KW	450	450	425	340	318	270	2,74
810550	H 550	SEAT 25 - 1,5 KW SEAT 25 - 2,2 KW SEAT 25 - 3 KW SEAT 30 - 0,55 KW SEAT 30 - 1,1 KW STORM 14 - 1,1 KW STORM 16 - 2,2 KW	550	550	425	340	318	270	4,25
810700	H 700	SEAT 35 - 2,2 KW SEAT 35 - 4 KW SEAT 35 - 5,5 KW SEAT 35 - 7,5 KW STORM 18 - 7,5 KW	700	715	585	505	420	430	12,00

ATEX ENCLOSED PEDESTALS

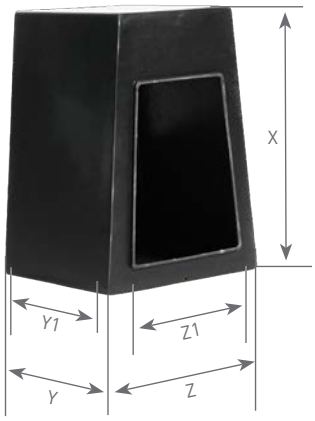

Reference Number	Specification	Compatibility	Type	Dimensions (mm) X	Z	Y	Z1	Y1 Drilling	Weight (Kg)
810450AT	H 450	SEAT 15 - 0,18 KW SEAT 15 - 0,37 KW SEAT 20 - 0,18 KW SEAT 20 - 0,75 KW SEAT 20 - 1,1 KW SEAT 25 - 0,18KW SEAT 25 - 0,37 KW STORM 10 - 0,06 KW STORM 10 - 0,09 KW STORM 12 - 0,18 KW STORM 12 - 0,37 KW STORM 14 - 1,1 KW	450	450	425	340	318	270	2,74
810550AT	H 550	SEAT 25 - 1,5 KW SEAT 25 - 2,2 KW SEAT 25 - 3 KW SEAT 30 - 0,55 KW SEAT 30 - 1,1 KW STORM 16 - 2,2 KW	550	550	425	340	318	270	4,25
810700AT	H 700	SEAT 35 - 2,2 KW SEAT 35 - 5,5 KW SEAT 35 - 7,5 KW STORM 18 - 7,5 KW	700	700	580	500	490	480	15,50

STANDARD AND ATEX SWITCHES

Specifications

3 poles / 1 speed
Cable 0,8 m. (IP65)
Weight (Kg): 0,54

ATEX Specifications

1 speed
ATEX Zone II
Weight (Kg): 0,58

Reference standard	Compatibility
819500	SEAT 15 - 0,18 KW SEAT 15 - 0,37 KW SEAT 20 - 0,18 KW SEAT 20 - 0,75 KW SEAT 20 - 1,1 KW SEAT 25 - 0,18 KW SEAT 25 - 0,37 KW SEAT 25 - 1,5 KW SEAT 25 - 3 KW SEAT 25 - 2,2 KW SEAT 30 - 0,55 KW SEAT 30 - 1,1 KW SEAT 35 - 2,2 KW SEAT 35 - 5,5 KW STORM 18 - 7,5 KW
819502	SEAT 35 - 7,5 KW SEAT 50 - 4 KW SEAT 50 - 5 KW

Reference Atex	Compatibility
819500AT	SEAT 15 - 0,18 KW SEAT 15 - 0,37 KW SEAT 20 - 0,18 KW SEAT 20 - 0,75 KW SEAT 20 - 1,1 KW SEAT 25 - 0,18 KW SEAT 25 - 0,37 KW SEAT 25 - 0,55 KW SEAT 25 - 1,5 KW SEAT 25 - 2,2 KW SEAT 25 - 3 KW SEAT 30 - 0,55KW SEAT 30 - 1,1 KW SEAT 35 - 2,2 KW SEAT 35 - 5,5 KW SEAT 50 - 4 KW SEAT 50 - 5 KW STORM 18 - 7,5 KW

OUR RANGE OF
MOUNTING BRACKETS

FAN MOUNTED ONTO METAL STAND

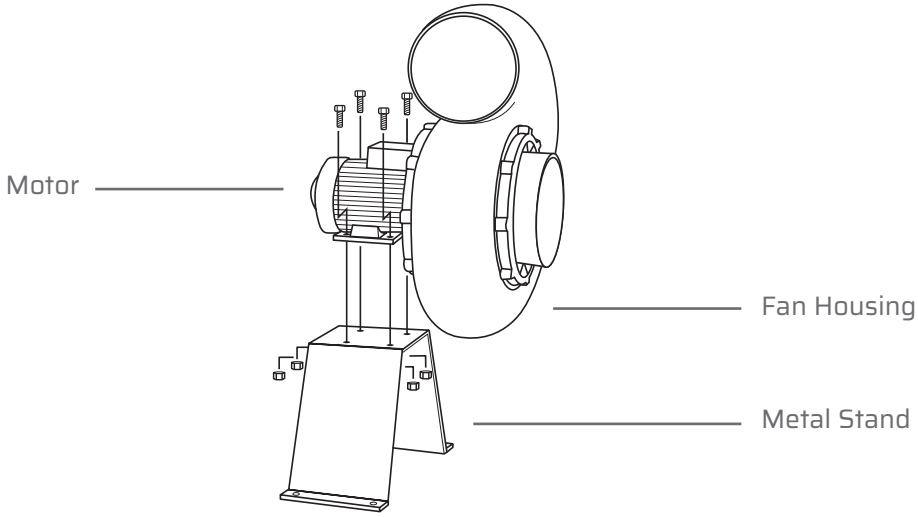

HIGH CHAIR MOUNTING PROTECTION

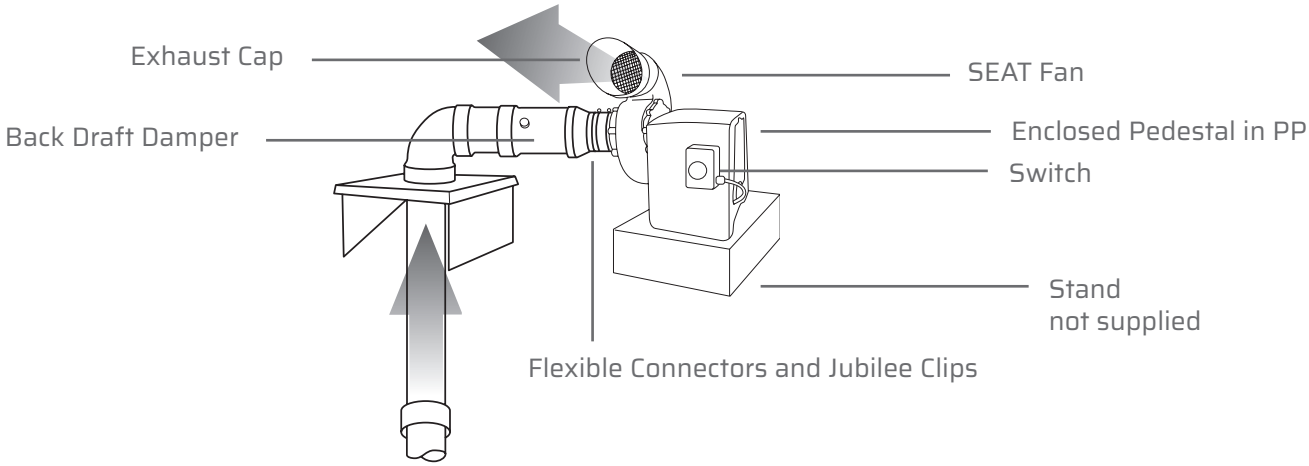

ROOF MOUNTING / ROOF UNIT

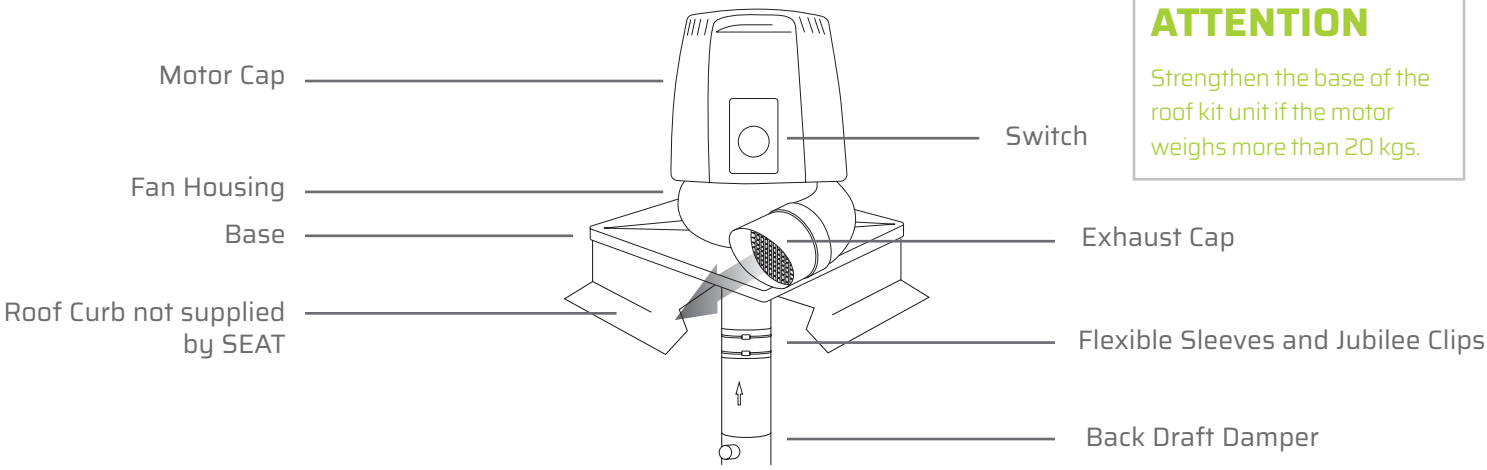

ATTENTION

Strengthen the base of the roof kit unit if the motor weighs more than 20 kgs.

OUR RANGE OF
FREQUENCY INVERTERS

Operating principle

VARIASEAT inverters are specially programmed and parameterized for each SEAT fan. They protect the motor in all our applications. They can be used to vary the fan speed to achieve significant energy savings.
They can be adapted to your electrical installation.

- Single-Phase 230V Motor Input / Three-Phase 230V Motor Output
- Three-Phase 400V Motor Input / Three-Phase 400V Motor Output
- Output Performance Frequency Range: 15Hz to 60Hz

Frequency inverters empower blower systems to attain the utmost extraction performance.

VARIASEAT

Reference	Power (kW)	Number	Speed	Mono 230V	Tri 400V	SEAT Serie	JET Serie	STORM Serie
VARIASEAT400 819600 - Single-Phase 819600TR - Three-Phase	0,37	6	1000	Yes	Yes	SEAT 15,20,25	JET 20, 25	
		4	1500	Yes	Yes	SEAT 15, 20, 25	JET 20, 25	STORM 10, 12
		2	3000	Yes	Yes	SEAT 15		STORM 10, 12
VARIASEAT750 819601 - Single-Phase 819601TR - Three-Phase	0,75	6	1000	Yes	Yes	SEAT 30	JET 30	
		4 / 0,55 kW	1500	Yes	Yes	SEAT 25	JET 25	
		2	3000	Yes	Yes	SEAT 20	JET 20	
VARIASEAT1100 819605 - Single-Phase 819605TR - Three-Phase	1,1	4	1500	Yes	Yes	SEAT 30	JET 30	
		2	3000	Yes	Yes	SEAT 20	JET 20	STORM 14
VARIASEAT1500 819602 - Single-Phase 819602TR - Three-Phase	1,5	8	750	Yes	Yes	SEAT 35		
		2	3000	Yes	Yes	SEAT 25	JET 25	
VARIASEAT2200 819603 - Single-Phase 819603TR - Three-Phase	2,2	6	1000	Yes	Yes	SEAT 35		
		2	3000	Yes	Yes	SEAT 25	JET 25	STORM 16
VARIASEAT4000 819606 (Three-Phase only)	4	4	1200	No	Yes	SEAT 50		
		4	1500	No	Yes	SEAT 35		
		2	3000	No	Yes	SEAT 25	JET 25	
VARIASEAT5500 819604 (Three-Phase only)	5,5	4	1500	No	Yes	SEAT 35, 50		
VARIASEAT7500 819612 (Three-Phase only)	7,5	4	1500	No	Yes	SEAT 35		STORM 18

ADVANTAGES

- Improved motor performance and increased longevity.
- Energy consumption savings.
- Provides motor protection and reduces high starting current consumption.
- Specific settings for different blower applications.
- Parameterization for ATEX motors.
- Multiple wiring configuration capability.
- Available in IP66 version.
- Compatible with EC motors.

Usage

- Connection to SEAT controllers: C, C2Speeds, CONTROL SEAT, CONTROL E-SEAT, L.COM, E-SEAT, CAPTUR E-SEAT
- 0-10V or 4-20mA control
- Speed presets/priorities
- Potentiometer management
- PTC sensor connection
- 0-10V output to other equipment (motorized shutters, etc.)

OUR RANGE OF **ACCESSORIES**

STANDARD FLEXIBLE SLEEVES

For all STORM, SEAT and JET types in Three-Phase, Single-Phase and Two Speeds EC.

Reference Number	Compatibility	Diameter (mm)	Weight (kg)
815075	STORM 10 - 0,06 KW	Ø 75	0,06
	STORM 10 - 0,09 KW		
815090	STORM 12 - 0,09 KW	Ø 90	0,07
	STORM 12 - 0,18 KW		
	STORM 12 - 0,37 KW		
815125	SEAT 15 - 0,18 KW	Ø 125	0,10
	SEAT 15 - 0,37 KW		
	STORM 14 - 1,1 KW		
815160	SEAT 20 - 0,18 KW	Ø 160	0,14
	SEAT 20 - 0,75 KW		
	SEAT 20 - 1,1 KW		
	STORM 16 - 2,2 KW		
815200	SEAT 25 - 0,18 KW	Ø 200	0,17
	SEAT 25 - 0,37 KW		
	SEAT 25 - 0,55 KW		
	SEAT 25 - 1,5 KW		
	SEAT 25 - 2,2 KW		
	SEAT 25 - 3 KW		
	STORM 18 - 7,5 KW		
815250	SEAT 30 - 0,55 KW	Ø 250	0,19
	SEAT 30 - 1,1 KW		
815315	SEAT 35 - 1,5 KW	Ø 315	0,23
	SEAT 35 - 2,2 KW		
	SEAT 35 - 4 KW		
	SEAT 35 - 5,5 KW		
	SEAT 35 - 7,5 KW		
815350 (refoulement) 815360 (aspiration)	SEAT 50 - 4 KW	Ø 600	0,088 + 0,060
	SEAT 50 - 5 KW		

ATEX FLEXIBLE SLEEVES

For all STORM, SEAT and JET types

Reference Number	Compatibility	Diameter (mm)	Weight (kg)
815090AT	STORM 12 - 0,09 KW	Ø 90	0,02
	STORM 12 - 0,18 KW		
	STORM 12 - 0,37 KW		
815125AT	SEAT 15 - 0,18 KW	Ø 125	0,03
	SEAT 15 - 0,37 KW		
	STORM 14 - 1,1 KW		
815160AT	SEAT 20 - 0,18 KW	Ø 160	0,04
	SEAT 20 - 0,75 KW		
	SEAT 20 - 1,1 KW		
	STORM 16 - 2,2 KW		
815200AT	SEAT 25 - 0,18 KW	Ø 200	0,05
	SEAT 25 - 0,37 KW		
	SEAT 25 - 0,55 KW		
	SEAT 25 - 1,5 KW		
	SEAT 25 - 2,2 KW		
	SEAT 25 - 3 KW		
	STORM 18 - 7,5 KW		
815250AT	SEAT 30 - 0,55 KW	Ø 250	0,06
	SEAT 30 - 1,1 KW		
815315AT	SEAT 35 - 1,5 KW	Ø 315	0,07
	SEAT 35 - 2,2 KW		
	SEAT 35 - 4 KW		
	SEAT 35 - 5,5 KW		
	SEAT 35 - 7,5 KW		

JUBILEE CLIPS

For all STORM, SEAT and JET types in Three-Phase, Single-Phase and Two Speeds EC.

Reference Number	Compatibility	Diameter (mm)	Weight (kg)
812125	STORM 10 - 0,06 KW	Ø 125	0,03
	STORM 10 - 0,09 KW		
	STORM 12 - 0,09 KW		
	STORM 12 - 0,18 KW		
	STORM 12 - 0,37 KW		
	SEAT 15 - 0,18 KW		
	SEAT 15 - 0,37 KW		
	STORM 14 - 1,1 KW		
812160	SEAT 20 - 0,18 KW	Ø 160	0,04
	SEAT 20 - 0,75 KW		
	SEAT 20 - 1,1 KW		
	STORM 16 - 2,2 KW		
812200	SEAT 25 - 0,18 KW	Ø 200	0,04
	SEAT 25 - 0,37 KW		
	SEAT 25 - 0,55 KW		
	SEAT 25 - 1,5 KW		
	SEAT 25 - 2,2 KW		
	SEAT 25 - 3 KW		
	STORM 18 - 7,5 KW		
812250	SEAT 30 - 0,55 KW	Ø 250	0,05
	SEAT 30 - 1,1 KW		
812315	SEAT 35 - 1,5 KW	Ø 315	0,06
	SEAT 35 - 2,2 KW		
	SEAT 35 - 4 KW		
	SEAT 35 - 5,5 KW		
	SEAT 35 - 7,5 KW		
812600	SEAT 50 - 4 KW	Ø 600	0,088 + 0,060
	SEAT 50 - 5 KW		

STANDARD EXHAUST CAP

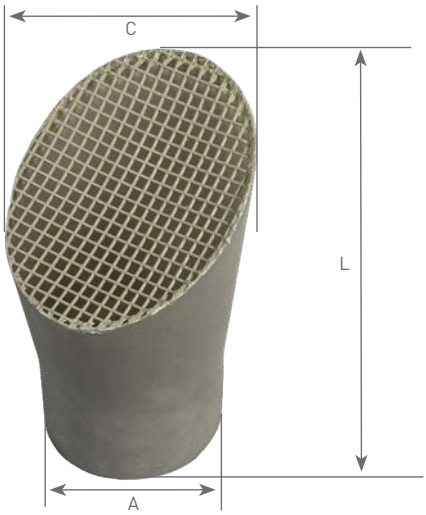

Reference Number	Compatibility	Dimensions (mm) A	L	C	Diameter	Weight (Kg)
814090	STORM 12 - 0,09 KW STORM 12 - 0,18 KW STORM 12 - 0,37 KW	100	165	120	Ø 90	0,094
814125	SEAT 15 - 0,18 KW SEAT 15 - 0,37 KW STORM 14 - 1,1 KW	125	160	155	Ø 125	0,020
814160	SEAT 20 - 0,75 KW SEAT 20 - 1,1 KW STORM 16 - 2,2 KW	160	200	215	Ø 160	0,040
814200	SEAT 25 - 0,18 KW SEAT 25 - 0,37 KW SEAT 25 - 0,55 KW SEAT 25 - 1,5 KW SEAT 25 - 2,2 KW SEAT 25 - 3 KW STORM 18 - 7,5 KW	200	210	240	Ø 200	0,060
814250	SEAT 30 - 0,55 KW SEAT 30 - 1,1 KW	250	260	305	Ø 250	1,000
814315	SEAT 35 - 1,5 KW SEAT 35 - 2,2 KW SEAT 35 - 4 KW SEAT 35 - 5,5 KW SEAT 35 - 7,5 KW	315	450	390	Ø 315	1,400

ATEX EXHAUST CAP

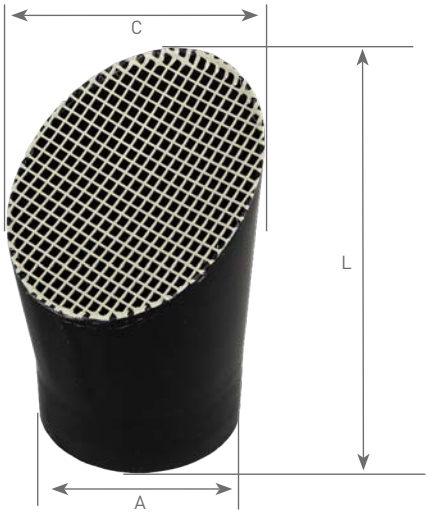

Reference Number	Compatibility	Dimensions (mm) A	L	C	Diameter	Weight (Kg)
814090AT	STORM 12 - 0,09 KW STORM 12 - 0,18 KW STORM 12 - 0,37 KW	100	165	120	Ø 90	0,107
814125AT	SEAT 15 - 0,18 KW SEAT 15 - 0,37 KW STORM 14 - 1,1 KW	125	160	155	Ø 125	0,232
814160AT	SEAT 20 - 0,18 KW SEAT 20 - 0,75 KW SEAT 20 - 1,1 KW STORM 16 - 2,2 KW	160	200	215	160	0,400
814200AT	SEAT 25 - 0,18 KW SEAT 25 - 0,37 KW SEAT 25 - 0,55 KW SEAT 25 - 1,5 KW SEAT 25 - 2,2 KW SEAT 25 - 3 KW STORM 18 - 7,5 KW	200	210	240	Ø 200	0,600
814250AT	SEAT 30 - 0,55 KW SEAT 30 - 1,1 KW	250	260	305	Ø 250	1,000
814315AT	SEAT 35 - 1,5 KW SEAT 35 - 2,2 KW SEAT 35 - 4 KW SEAT 35 - 5,5 KW SEAT 35 - 7,5 KW	315	450	390	Ø 315	1,200

ANTI VIBRATION MOUNTINGS

Reference Number	Compatibility	Dimensions (mm) A	L	Diameter	Weight (Kg)
810100	SEAT 15 - 0,18 KW SEAT 15 - 0,37 KW SEAT 20 - 0,18 KW SEAT 25 - 0,18 KW SEAT 25 - 0,37 KW STORM 10 - 0,09 KW STORM 12 - 0,37 KW STORM 14 - 1,1 KW	20	60	Ø 6 mm	0,09
810101	SEAT 20 - 0,75 KW SEAT 20 - 1,1 KW SEAT 25 - 0,55 KW SEAT 25 -1,5 KW SEAT 25 - 2,2 KW SEAT 30 - 0,55 KW SEAT 30 - 1,1 KW STORM 16 - 2,2 KW	25	70	Ø 8 mm	
810102	SEAT 25 - 3 KW SEAT 35 - 1,5 KW SEAT 35 - 2,2 KW SEAT 35 - 4 KW SEAT 35 - 5,5 KW SEAT 35 - 7,5 KW STORM 18 - 7,5 KW	40	75	Ø 10 mm	

OUR RANGE OF **ACCESSORIES**

HIGH-RESISTANCE POLYMER SPLINTER SHIELD

Reference Number	Compatibility	Jubilee Clip
818010	STORM 10	812125
818015	SEAT 15 - 0,18 KW	812125
	SEAT 15 - 0,37 KW	
	STORM 12 - 0,37 KW	
818020	SEAT 20 - 0,18 KW	812121
	SEAT 20 - 0,75 KW	
	SEAT 20 - 1,1 KW	
	STORM 14 - 1,1 KW	
818025	SEAT 25 - 0,18 KW	812200
	SEAT 25 - 0,37 KW	
	SEAT 25 - 0,55 KW	
	SEAT 25 - 1,5 KW	
	SEAT 25 - 2,2 KW	
	SEAT 25 - 3 KW	
	STORM 16 - 2,2 KW	
	STORM 18 - 7,5KW	
818030	SEAT 30 - 0,55 KW	812250
	SEAT 30 - 1,1 KW	
818035	SEAT 35 - 1,5 KW	812315
	SEAT 35 - 2,2 KW	
	SEAT 35 - 4 KW	
	SEAT 35 - 5,5 KW	
	SEAT 35 - 7,5 KW	

BACK DRAFT DAMPERS

(Vertical and horizontal mounting)

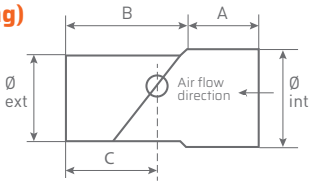

Reference Number	Dimensions (mm) A	B	C	Diameter	Weight (Kg)
819125	60	160	110	Ø 125	0,34
819160	60	200	130	Ø 160	0,49
819200	60	210	140	Ø 200	0,62
819250	60	260	170	Ø 250	0,97
819315	60	290	180	Ø 315	1,71

ADJUSTABLE DAMPER

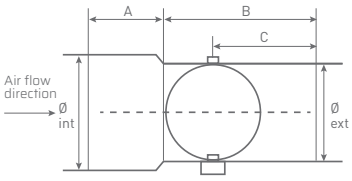

Reference Number	Dimensions (mm) A	B	C	Diameter	Weight (Kg)
818125	60	130	80	Ø 125	0,41
818160	60	145	90	Ø 160	0,53
818200	60	160	100	Ø 200	0,67
818250	60	165	100	Ø 250	1,08
818315	60	170	100	Ø 315	1,48

STANDARD MOTORIZED SHUTTERS

Reference Number	Dimensions (mm) L	Diameter	Weight (Kg)
817125	140	Ø 125	0,60
817160	180	Ø 160	0,60
817200	225	Ø 200	0,60
817250	265	Ø 250	0,60
817315	305	Ø 315	0,60

ACCESSORY - MOTORIZATION (Everything or Nothing)

Reference Number	Dimensions (mm) Width	Length	Height	Weight (Kg)
817100 STANDARD 35 Sec.	65	115	60	0,50
817102 0-10v 8 Sec.	80	145	80	0,95

REDUCERS

Reference Number	Compatibility	Poids
815701	Ø 125 / Ø 160	0,26
815705	Ø 125 / Ø 200	1
815702	Ø 160 / Ø 200	0,26
815703	Ø 200 / Ø 250	0,32
815704	Ø 250 / Ø 315	2,05
815709	Ø 315 / Ø 400	1,23

POTENTIOMETER

Reference Number	Dimensions (mm) P	H	L	Weight (Kg)
819609	51	70	100	0,1

OUR RANGE OF
AIR FLOW CONTROLLERS

Stand-alone controllers: low individual control of each ductless fume hood.
Our communicating controllers: they enable quantitative management of all air extraction in your laboratory room(s), and connect to the AHU.

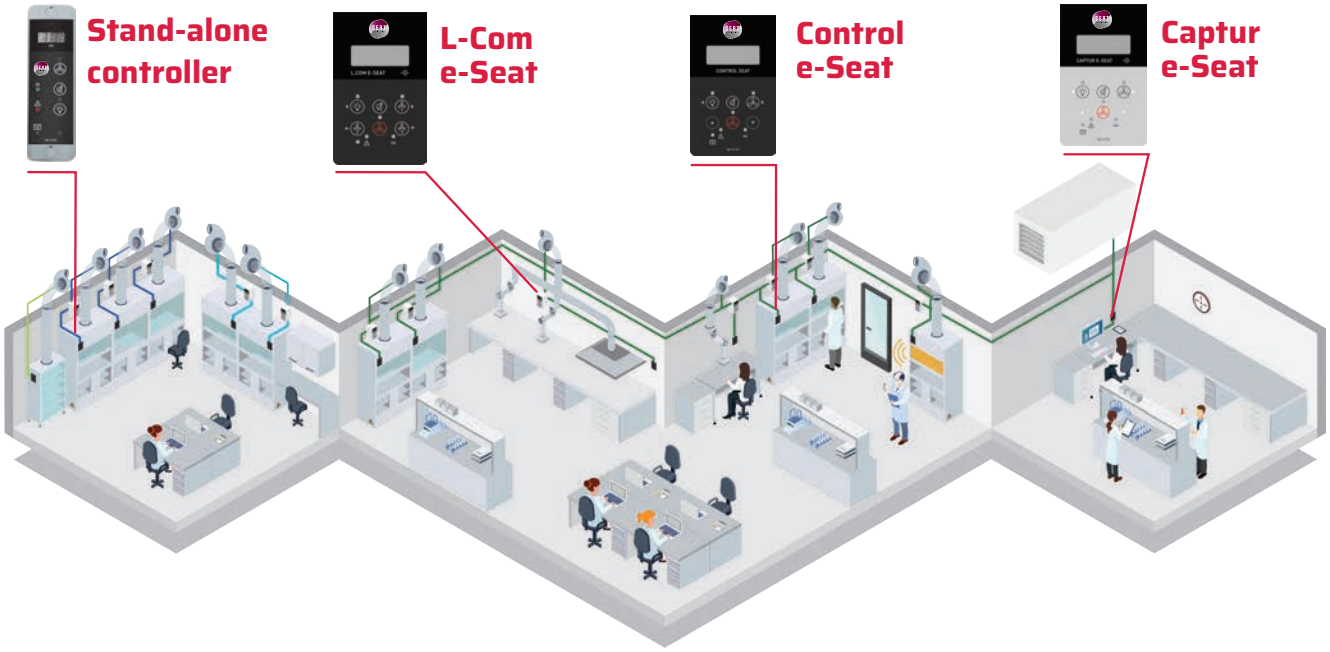

AUTOMATIC INACTIVITY
CONTROLLER ECOGLASS

The Ecoglass energy-saving system secures a ductless fume hood by automatically closing its movable front panel when inactivity is detected.

By automatically lowering the front panel of a ductless fume hood when the operator moves away, the Ecoglass controller makes the installation safer. It also reduces the air extraction required. By lightening the AHU's load in this way, significant energy savings can be made on space heating or AC.

OPERATING PRINCIPLE

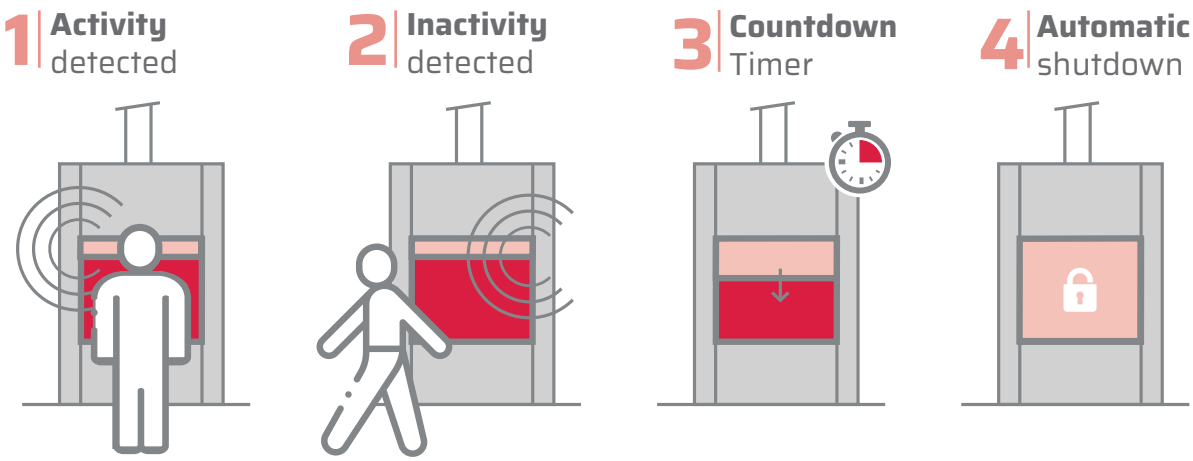

SOME
PROJECTS

▲ **France** **France** ▼

▲ **France** **France** ▼

▲ **France** **France** ▼

▲ **France** **France** ▼

SOME
PROJECTS

▲ **New Zealand**

United-Kingdom ▼

▲ **Brazil**

Portugal ▼

▲ **United-Kingdom**

▲ **Thailand**

Dubai ▼

A WORLDWIDE **PRESENCE**

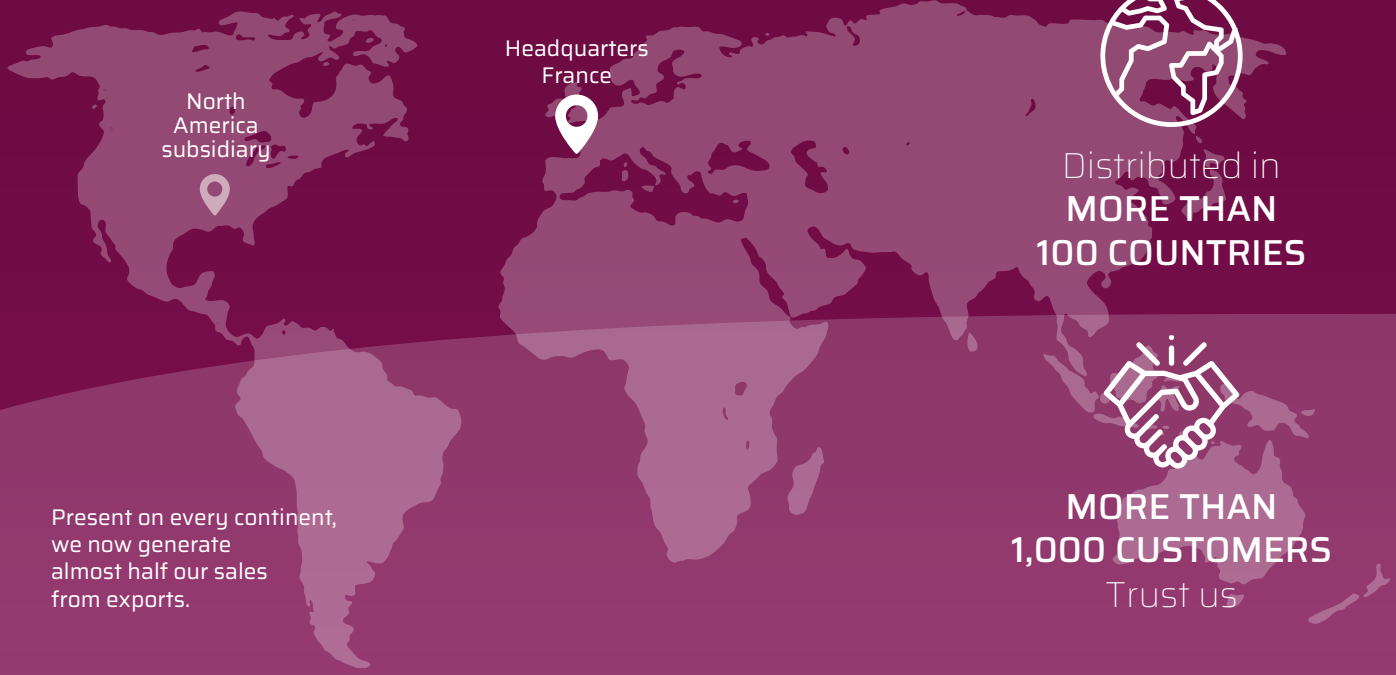

Present on every continent, we now generate almost half our sales from exports.

Distributed in
MORE THAN 100 COUNTRIES

MORE THAN 1,000 CUSTOMERS
Trust us

70 Impasse Jean Mermoz
Parc Technologique Delta Sud
09340 VERNIOLLE FRANCE

Phone: +33(0)5 61 69 84 43
Fax: +33(0)5 61 67 86 03
Mail: info@seat-ventilation.com
LinkedIn Facebook YouTube

www.seat-ventilation.com

Member of CETIAT (Centre Technique des Industries Aérauliques et Thermiques), **AMCA** (Air Movement and Control Association) and **FABRILABO** (Trade Union Chamber of Laboratory Equipment and Equipment Manufacturers)